Scottish & Southern Electricity Networks

RIIO ED2 Engineering Justification Paper (EJP)

Clachan/Aird Primary Substations

Worst Served Customer Proposal

Investment Reference No: 344_SHEPD_REGIONAL_CLACHAN

Contents

Definitions and Abbreviations

Acronym	Definition
EJP	Engineering Justification Paper
CBA	Cost Benefit Analysis
IDP	Investment Decision Pack
WSC	Worst Served Customer
NoSR	North of Scotland Resilience
SSEN	Scottish and Southern Electricity Network
NRN	Network Reference Number
EHV	Extra High Voltage (33kV)
CBRM	Condition Based Risk Management

1 Executive Summary

This Engineering Justification Paper (EJP) covers the strategic investment required to address the high interruptions numbers at Clachan and Aird substations. Both substations are currently held on the SHEPD Worst Served Customer (WSC) sites. Clachan supplies in total 1,066 customers of which 831 are WSCs based on the ED2 WSC definition. Customers at Clachan have experienced up to 22 interruptions over the three consecutive years between 2017 and 2019 with average interruption length of around one and half hour. Aird has 76 customers classified as WSC experiencing between 12 and 13 interruptions over the same period.

Following optioneering and detailed analysis, as set out in this EJP, the proposed scope of works to address the WSC issue at Clachan and Aird are as follows:

- Install a new 14km 11kV overhead line with 50 mm^2 covered conductor between Clachan substation and pole 343 on feeder 036;
- Install 1 no. 11kV primary switchgear at Clachan;
- Install in total approximately 5.7km of new 50 mm^2 overhead line to reinforce the existing spurs where the worst performing sections are.
- Install a new RMU and additional voltage regulator to establish normal open points (NOP) at both ends to existing feeders 036 and 037.
- Install 2.5km circuit including 1km underground cable on Aird 012 feeder;
- Install 0.7km of new 50 mm^2 overhead line on Aird 011 – Creagorry CC House to Ford Terrace section;

Delivering a safe, resilient and responsive network

The anticipated cost to deliver the proposed solution is £1.93m. This remote area in the north of Uist isle has network investment priority score of 4, indicating the customer vulnerability. Based on this score and the phasing with overall NoSR schemes, it is planned for delivery in 2026/27 in ED2.

The scheme delivers following outputs and benefits:

- Improved network performance for the 907 WSCs at Clachan and Aird by providing the dedicated HV feeder to the northern part of the existing 11kV ring and reinforcing the worst performing spurs. It is expected that these customers will not be WSCs once the scheme is implemented.
- Expected CI and CML improvements are 0.4527 and 0.2706 which are equivalent to 2,592 and 117,100 actual volume.
- Reduced losses by 111.66MWh per annum in this part of the network as result of the additional circuit supplying both sites.

Non-Load investment sits within the Safe and Resilient Totex.

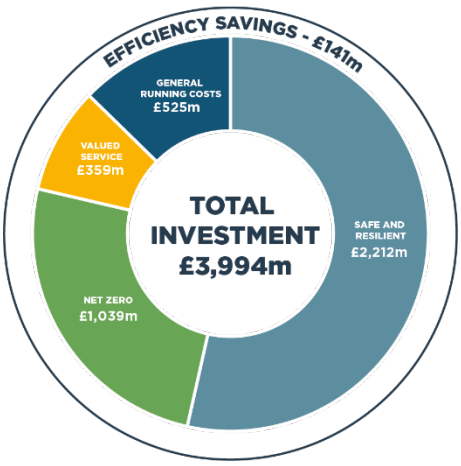

2 Investment Summary Table

Table 1 below provides a high level summary of the key information relevant to this Engineering Justification Paper (EJP).

Table 1: Investment Summary

Name of Scheme/Programme	Clachan/Aird Substations WSC Proposal					
Primary Investment Driver	North of Scotland Resilience					
Scheme reference/mechanism or category	*344_SHEPD_REGIONAL_WSC_CLACHAN*					
Output reference/type	As above					
Cost	*£1.93m.*					
Delivery year	2025/26					
Reporting Table	The following Cost and Volume (CV) tables correlate to the primary investment drivers for the asset category covered by this Engineering Justification Paper: • CV15 North of Scotland Resilience (SHEPD)					
Outputs included in RIIO ED1 Business Plan	**No**					
Spend Apportionment (£m)	**2023**	**2024**	**2025**	**2026**	**2027**	**Total**
	0	0	0	1.93	0	**1.93**

3 Introduction

This EJP provides high-level background information for this proposed WSC scheme. It explains the data and analysis undertaken, the existing network arrangement, the proposed works and improvements to the network, the expected outcomes from these works and justifications for the proposals.

In order to establish the most economic and efficient solution, the EJP provides an exhaustive list of the options considered through the optioneering process. Each option is described in detail in section 6, with the justification set out for those options which are deemed unviable solutions. This is based on the background information and fault data analysis detailed in section 4. The Cost Benefit Analysis (CBA) Summary in section 7 provides the comparative results of all the options considered within the CBA and sets out the rationale and justification for the preferred solution.

The Primary Investment Driver described within this EJP is CV15 – North of Scotland Resilience. The proposed investment as detailed within this EJP will increase the reliability and security of the 11kV network at both Clachan and Aird Substation. Post improvement works, due to lower numbers of faults impacting these customers, all existing worst served customers will be removed from WSC classification.

The high numbers of WSCs on the Clachan and Aird 11kV network has varied throughout ED1, ranging from 598 to 1,096 customers. In 2019, the circuit had a total of 831 WSCs that indicated high volumes of interruptions to their supply. It is clear from the data that this is not acceptable, therefore investment within this network is required.

4 Background Information and Analysis

4.1 Existing Network

Both Clachan and Aird T1 are supplied from Loch Carnan (665-206) via a circuit of 31km length consisting of overhead line and two sections of subsea cable. The two sites are located in the Isle of North Uist and Benbecula in Western Isles.

The alternative 33kV supply under auto-changeover scheme is via a circuit of 28km length consisting of overhead line and one section of subsea cable. This circuit also supplies Aird T2. The distance from Clachan Primary Substation to the customers at the remotest end is approximately 30km via 11kV overhead line.

There are three 11kV feeders from Clachan Primary Substation, with HV feeder references 35, 36 and 37. Aird Primary substation has two 11kV feeders with reference number 011 and 012. Clachan feeder 037 is interconnected with Aird feeder 012. Apart from Clachan feeder 035, all other feeders have had WSCs in the ED1 reporting years. The details of the four feeders including the Priority Service Register (PSR) customer numbers are listed in the table below.

Table 2: Clachan and Aird WSCs HV Feeder

	HV Feeder	Number of connected customers	Number of PSR customers	Length of OHL (km)	Length of UG cable (km)
Clachan	**653-036**	563	100	70.29	3.73
Clachan	**653-037**	503	94	59.37	0.66
Aird	**671-012**	375	58	36.23	6.90
Aird	**671-011**	605	112	38.02	5.33

These feeders traverse significant distance along the coastline of North Uist in the Western Isles as shown on the map below.

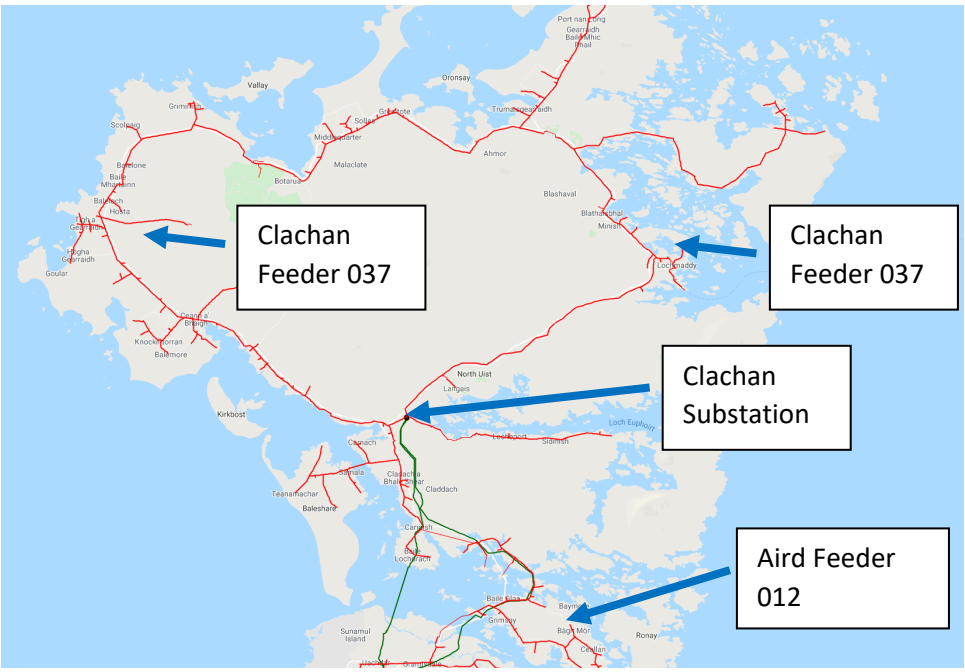

Figure 1: Locations of Clachan Substation and 11kV Feeders

4.2 WSC Network Performance

Over the first five years in ED1, the average WSC number at Clachan substation is 845. This is out of the total 1,066 customers at thes two HV feeders. Out of the total WSC, 194 customers are PSR customers. The fault data in 2019 shows that the interruption number from the previous three years ranged up to 22. The varied range in interruptions is because, being a radial circuit, customers located towards the remote end of the line will experience more interruptions than those at the source end of the line. The exact number of customers affected by each fault will be dependent on the actual location of the fault on the line.

At Aird, there are 76 WSCs in 2019 out of the total 980 customers. On Aird feeder 011, these WSCs are on the Creagorry CC House to Ford Terrace section, experiencing up to 13 interruptions over the 3-year period. For Aird feeder 012, the worst performing section is at the Grimsay Road spur.

The table 3 below shows the WSC network performance on the 11kV circuit basis (although this also counts 33kV interruptions which impacted the respective 11kV circuit as well). It shows the WSC number and the range of interruptions over the 3-year period from the reporting year 2019/20 against each circuit. As part of the feedback from the stakeholder engagement event, the interruption duration and the customer vulnerability are also considered as key factors in scheme proposal. These are also shown in the table.

Table 3: WSC Network Performance

Primary Name	HV Feeder	WSC No.	Range of interruption No. over 3-year	Average interruption length (mins)	Network Investment Priority score (high score = more vulnerable)
Clachan	**653-036**	431	12-22	112	4.0
Clachan	**653-037**	400	12-21	79	3.7
Aird	**671-012**	58	12-13	117	4.0
Aird	**671-011**	18	13	95	3.9

Due to the relative remoteness Clachan area from the main depot at South Uist island, it takes a minimum of 60 minutes driving time to reach the far end of the circuits. This in general leads to increased interruption durations and would benefit from any investment of new infrastructure as this would result in less customer going off supply in the first place. It will also provide greater ability in the immediate post fault period to remotely section the networks and recover more of the customers on these circuits via automation.

4.3 Demand Forecast

The demand forecast of these sites based on the consumer transformation scenario are shown in the table below. The average annual growth rate between 2021 and 2033 at Aird and Clachan are 2.47% and 10.69%.

Table 4: Demand Forecast

Year	2021	2022	2023	2024	2025	2026	2027	2028	2029	2030	2031	2032	2033
AIRD	2.45	2.46	2.48	2.57	2.61	2.70	2.75	2.80	2.88	3.02	3.14	3.22	3.28
CLACHAN	2.08	2.08	2.10	2.14	2.29	2.42	2.53	2.63	2.76	2.93	3.99	5.23	6.57

4.4 Fault Data Analysis

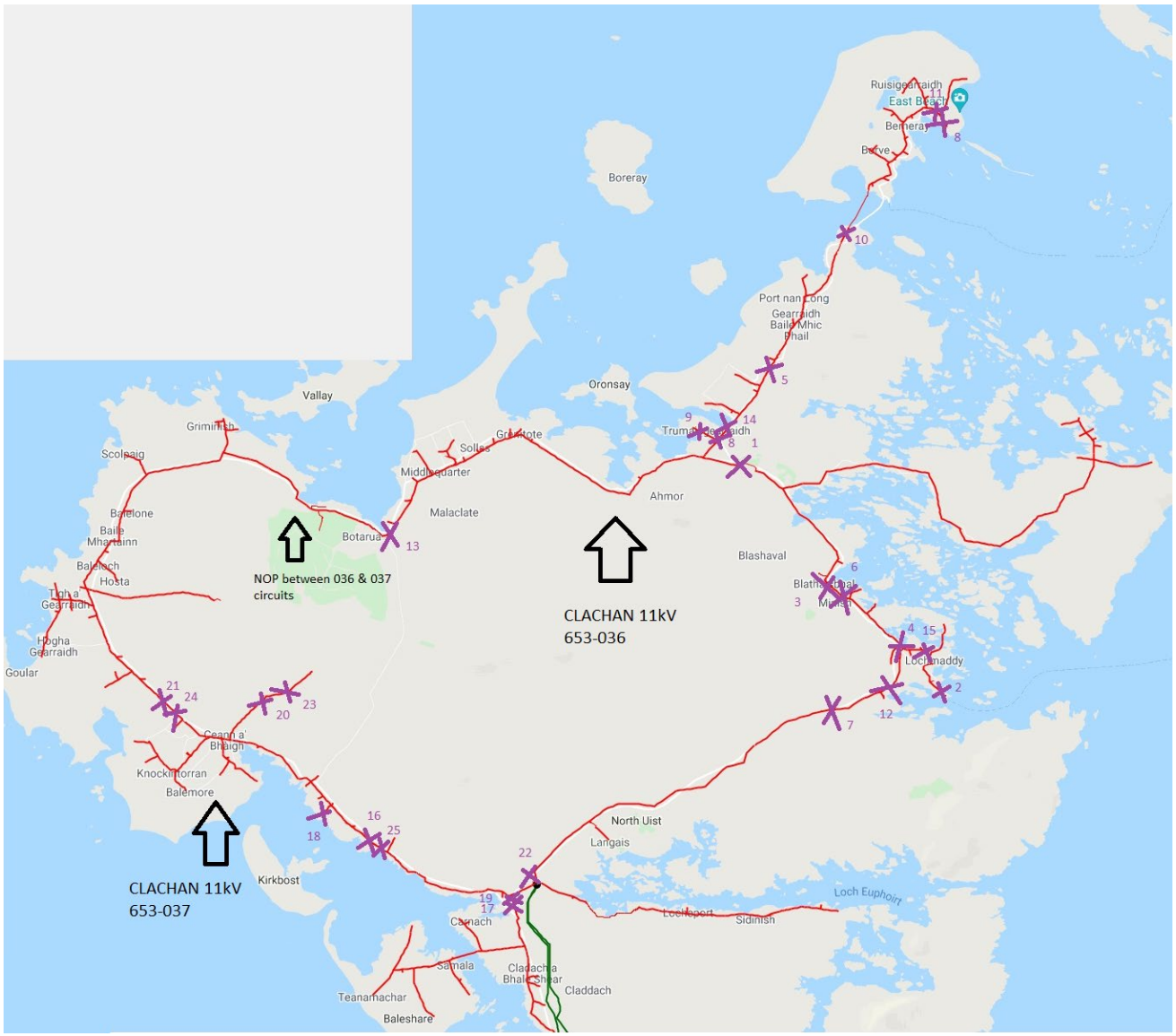

Figure 2: Location of faults affecting Clachan 036 & 037 customers

The list below reflects where faults have affected higher customer numbers across the proposed area for investment, there are other lower customer number faults that have occurred during the identified WSC time period which have not been listed.

Table 5: Demand Forecast

Date	Fault Description	No. Customers Impacted
2017	036 circuit 11kV fault: Deterioration, HV Cable box faulted	554
2017	036 circuit 11kV fault: Deterioration, broken OHL binder	136
2017	036 circuit 11kV fault: Wind and Gale, broken OHL stay caused low conductors	403
2017	036 circuit 11kV fault: Transient, PMCB Operation	402

2017	036 circuit 11kV fault: Deterioration, Faulty PMT	187
2018	036 circuit 11kV fault: Deterioration, Faulty PMT plus PMCB and CB grading issues	644
2018	036 circuit 11kV fault: Wind and Gale, Broken OHL Conductor	558
2018	036 circuit 11kV fault: Deterioration, Broken OHL Pole due to broken OHL insulator	150
2018	036 circuit 11kV fault: 3rd Party Contact, Broken OHL Jumper	187
2018	036 circuit 11kV fault: Deterioration, Broken OHL Pole due to broken OHL insulator	150
2018	036 circuit 11kV fault: Deterioration, Broken OHL Crimp causing low conductors	149
2019	036 circuit 11kV fault: Deterioration, Faulty PMT	562
2019	036 circuit 11kV fault: Lightning, Broken OHL Insulator	410
2019	036 circuit 11kV fault: Birds, Broken OHL Conductor	187
2019	036 circuit 11kV fault: Deterioration, Faulty Sure Arrestor	138
2017	037 circuit 11kV fault: Deterioration, Broken OHL Conductor	649
2017	037 circuit 11kV fault: Birds, Broken OHL Conductor	501
2017	037 circuit 11kV fault: Lightning, Faulted PMT	342
2017	037 circuit 11kV fault: Birds, Broken OHL Conductor	498
2017	037 circuit 11kV fault: Deterioration, Broken OHL Insulator caused broken pole	342
2017	037 circuit 11kV fault: Deterioration, Faulty PMT	292
2018	036 & 037 circuits 11kV fault: Testing/Commissioning Error, Primary CB 037 tripped during testing while backfeeding 036 circuit	1060
2018	037 circuit 11kV fault: Ice, Broken OHL Conductors	344
2018	037 circuit 11kV fault: Ice, Broken OHL Insulator causing burnt pole	248

There have also been wider Uist 33kV faults which have affected the network performance of Clachan.

The 33kV network supplying the sites is considerably long and as a result there have been several faults on the 33kV circuit from Loch Carnan. The auto-changeover scheme at Clachan and Aird primaries has however operated successfully in the past in the event of 33kV fault from Loch Carnan. Seven out of eight interruptions in ED1 years have all been successfully operated under the auto-changeover scheme.

The 33kV faults have not been the major contributory factor to the WSCs at Clachan with two 33kV interruptions over the last 3-year period. It is 11kV faults which have been the predominant factor in the WSC performance of this network during the 2017 and 2019 period.As mentioned earlier the fault rate on the 11kV feeders at Clachan have been significantly high. The long radial network, result in large volumes of faults at the remote ends of the network. The full faults list between 2017 and 2019 contributing to the interruptions are listed in the appendix 3.

5 Optioneering

This section of the report sets out the investment options that are considered when resolving the WSC issues. As described below a holistic approach is taken to ensure investment options which are both least regrets and represents best value for money for network customers are identified.

5.1 Summary of Options

The table 5 below provides a high-level summary of the 5 investment options under consideration along with the advantages and disadvantages associated with each. A more detailed description of each option is then provided within the proceeding sub-sections.

Table 6: Summary of WSC Investment Options

Option	Description	Advantages	Disadvantages	Result
1. Do Nothing (Baseline)	No upfront action taken to improve the network performance. Maintenance and Inspection activities continue as normal.	No additional cost	WSCs will continue experiencing high number of interruptions.	Rejected
2. Enhanced Maintenance and/or Inspection (Refurbishment)	Enhanced inspection and maintenance to improve asset condition or slow the rate of ageing.	Cost effective over short time period No large upfront CAPEX	Additional maintenance resource required Significant proportion of customers remain as WSCs Increase in OPEX	Taken forward to further assessment.
3. Re-build existing lines (Replacement)	Rebuilding the existing network where the WSCs are to reduce the probability of failure on components.	Improve the network performance over short term No further maintenance or inspection required	Increase in CAPEX Lower utilisation of existing assets WSCs will fall back in this category over short period of time. No new fault resilience added	Taken forward to further assessment.
4. Reinforcing existing network (Reinforcement)	Installation of additional assets to mitigate the risk of interruptions due to long circuit supply arrangement	WSCs unlikely to return to this category as new fault resilience added Long term investment Wider benefits to network users including Net Zero targets	Often costly when compared with other options Longer delivery time due to the likely requirement of additional consent	Taken forward to further assessment/preferred option.
5. Flexible solutions	Use battery storage or other alternative mean to support the network and mitigate interruptions	Reduced requirement of reinforcing the network	Technology and mechanism is yet to be proven Limited sites that can utilise such	Option rejected.

		Competitive cost comparing to the reinforcement option	arrangement to improve WSC performance	

6 Analysis and Cost

6.1 Option 1: Do-Minimum

Estimated Cost: £0k

Due to the remoteness of the Clachan feeders, it is supplied through a long radial feed circuit that stretches along the coast of the Isle of North Uist. Without any intervention, the WSCs will experience similar level of interruptions into ED2 and beyond. Therefore, this option is not considered viable.

6.2 Option 2: Enhanced Maintenance and/or Inspection (Refurbishment)

Estimated Cost: £255k

This option is to carry out enhanced maintenance on the WSC HV feeders. This will target the asset with poor health condition and the worst performing sections with measures such as pole replacement and refurbishment, installation of covered conductors and further provision of automatic switching devices. This is likely to improve the network performance and reduce the probability of failure over the short term.

However, due to the long radial network, this measure alone would deliver only limited benefits to some of these customers. It will not warrant the improved performance for WSCs at the entire feeders over ED2 and beyond. Particularly those customers at the remotest end would continue to endure fault interruptions in excess of 12 interruptions over any three-year period.

6.3 Option 3: Re-build existing lines (Replacement)

Estimated Cost: £2,824k

Under this option, it is considered that the worst performing sections of the overhead line elements are being re-built:

- [redacted] of the worst performing 11kV overhead line network at Clachan feeder 036;
- [redacted] of the worst performing 11kV overhead line network at Clachan feeder 037;
- [redacted] of the worst performing 11kV overhead line network at Aird feeder 012;
- [redacted] of the worst performing 11kV overhead line network at Aird feeder 011;

As a result of the proposed works, it is expected that the network performance will result in reasonable improvements however the network performance would deteriorate over time. It is likely that significant number of customers would remain as WSCs as no fault resilience is added to the circuit in the form of circuit interconnection or splitting the circuit and so the whole 11kV circuit would remain exposed to faults arising from external factors.

During the proposed Option 3 works, it is likely that the proposals would be built as an 'online' build which requires circuit outages that would impact the respective WSC and potentially wider area customers. Also, it would lead to an increase in diesel usage and CO_2 emissions due to usage of mobile generation to ensure customers were not off supply for excessive periods of time during the works.

In terms of CBA assessment it is assumed that 20 years post carrying out the Option 3 works, due to deteriorating performance of the circuit, that the Option 4 reinforcement proposal would have to be

implemented at that point in the future. Therefore, the costed option in the CBA allows for re-building of the circuit in ED2 followed by reinforcement in a future price control period.

6.4 Option 4: Reinforcing existing network (Reinforcement)

Estimated Cost: £1,928k

To enhance the resilience for customers at the remotest end, it is proposed to install a new 11kV switchgear at Clachan and a new 14km overhead line circuit with covered conductor to connect to the pole 343 currently on feeder 036. In addition, there are groups of customers who have experienced more than 20 interruptions. Additional measures would be required to improve the network performance to remove them from WSC category. This involves following sites:

- 653-036:
  - Port Ann Long spur, 150 customers;
  - Lochportain spur, 36 customers;
- 653-037:
  - Kilda View Spur, 28 customers;

For these three spurs, it is proposed to install new overhead line section to form a ring to reduce the interruptions, as shown in the figure 3 below.

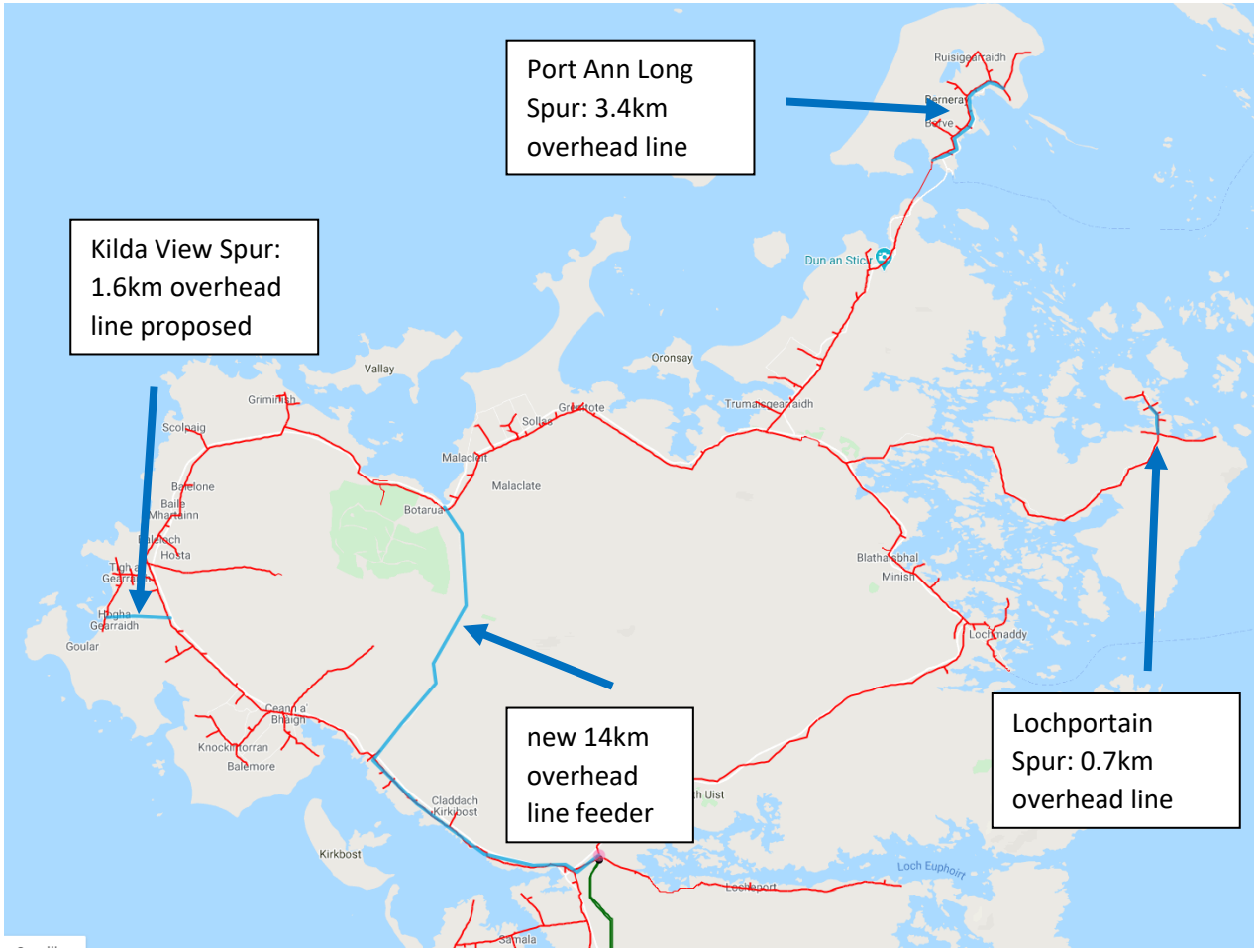

Figure 3: Proposed 11kV Overhead Line Installations

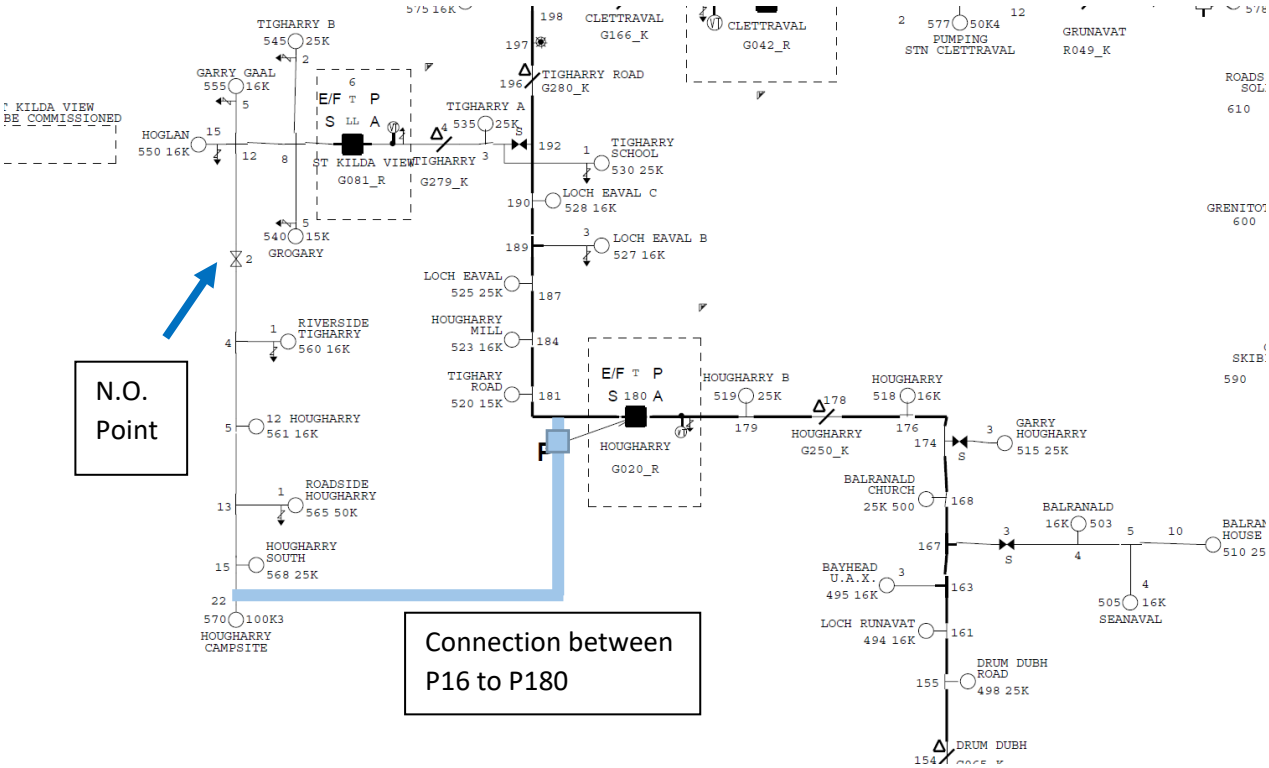

Figure 4: Proposed 11kV Ring Connection on Kilda View Spur

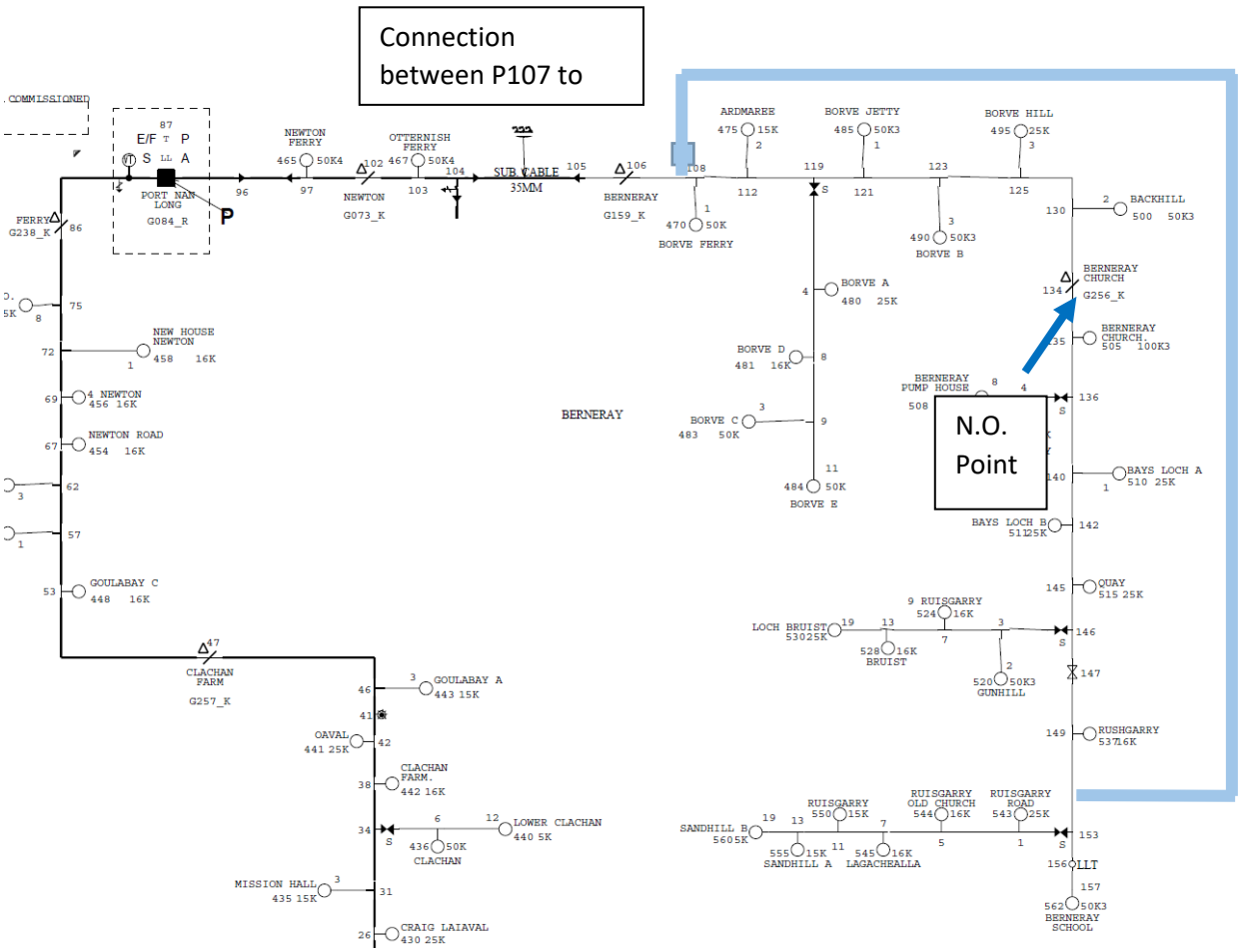

Figure 5: Proposed 11kV Ring Connection on Port Ann Long Spur

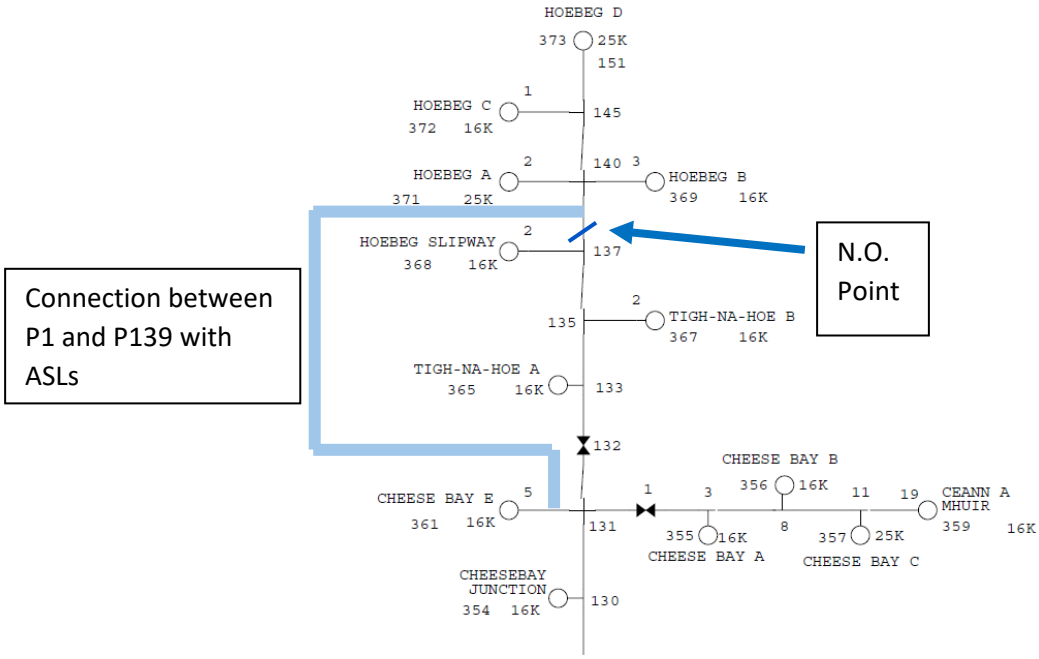

Figure 6: Proposed 11kV Ring Connection on Lochportain

For Aird feeder 012, the worst performing section is at the Grimsay Road spur. It is proposed to install a new section to connect Grimsay Road P78 and Claddach Carinish spur to create a ringed connection to improve the resilience. This 2.5km circuit includes some cable installation if following the proposed route as indicated in the map below. Aird 011 – Creagorry CC House to Ford Terrace, 0.7km, should also be replaced with covered conductor.

Figure 7: Proposed 11kV Connection on Aird Feeder

The proposal to build new infrastructure within Option 4 will allow for the majority of the equipment to be construction 'offline'. Therefore, this will minimise the requirement for circuit outages which would enviably impact the existing WSCs and wider area customers. The reduced outage requirements would also result in lower amounts of mobile generation; thus, this will also reduce the CO2 impact when compared with Option 3.

Therefore, taking account of these factors, this is the preferred option.

6.5 Option 5: Flexible Solution

Estimated Cost: £1,350k

Flexibility services is not proven to improve the network resilience. It is particularly challenging for the scenario of HV feeder faults. Due to nature of HV network, the flexible solution needs to be made available throughout the year and be able to support the network over the period to allow the restoration. This period can be up to 2 hours based on the fault history.

The estimated cost is based on the energy storage service to support 1MW load with maximum utilisation of 30 days per annum in the last three years of ED2. The technology is still unproven for a solution that can support the network of this size for this duration. This will also be unable to support the faults further on the HV feeders, hence has limited impact to the WSC performance improvement. Therefore, this option is not considered viable and has been rejected.

7 Summary of Cost Benefit Analysis (CBA)

This section of the report provides an overview for each option from the Cost Benefit Analysis (CBA). A detailed exercise has been undertaken to support the investment strategy that is described within this EJP. In total, three categories of CBAs have been produced as described below. It provides an overall comparative review and analysis of the options, confirmation of the EJP preferred option and the associated justifications. The figures presented below represent the expected percentage improvement of the Ofgem CI & CML methodology ratio figures for SHEPD area per year and the expected actual volume reductions of CI and CMLs in the SHEPD area per year.

7.1 Cost Benefit Analysis comparisons

The table below demonstrates that the reinforcement option is the preferred option as the other options are either rejected as non-viable or have a poorer NPV. The impact of continuing poor CI/CML resulting from other options has demonstrable low NPV, whereas the preferred option allows the customers to benefit from investment in ED2 and improve network performance. Option 2 incorporates the works in Option 4 with reinforcement in the ED3 period which leads to the improved performance evident in the NPV figure below. However, it is apparent that delaying the investment does not provide the best value for money solution, reinforcing the case for Option 4.

The preferred option will bring wider benefits of improved network performance for this WSC site. This option is further supported by the expected demand average annual growth rate of 10.69% by 2033 at Clachan as discussed in section 4.3.

Table 7: Cost Benefit Analysis Comparisons

Options	NPV After 45 Years (£k)
Option 1 – Do Minimum	0
Option 2 – Enhanced Maintenance and Inspection	430
Option 3 – Asset Replacement	-1,730
Option 4 – Circuit Reinforcement	680
Option 5 – Flexible Solution	N/A

7.2 Benefit analysis of refurbishing the existing line (Option 2)

It is expected that following Customer Interruption (CI) and Customer Minutes Lost (CML) improvements will be achieved under this option. These figures are too low to improve the number of WSC and will make no discernible impact on the quality of supply and network performance. The assumption is that these benefits will diminish over a period of five years, by when the reinforcement option would be necessary to address the WSC issue.

Table 8: CI/CML Benefits for Option 2

Circuit / NRN	CI Improvement % (Actual Volume)	CML Improvement % (Actual volume)
CLACHAN (653 036)	0.0368 (289)	0.0415 (32615)
CLACHAN (653 037)	0.0558 (438)	0.0514 (40322)

AIRD (671 012)	0.0261 (204)	0.0239 (18789)
AIRD (671 011)	0.0245 (192)	0.0236 (18521)

7.3 Benefit analysis of re-building of the existing line (Option 3)

It is expected that same CI & CML improvements as the refurbishment option will be achieved due to the same network arrangement being retained. The assumption is that these benefits will diminish over a longer period of twenty years and at this future point the reinforcement option would be necessary to address the WSC issue.

7.4 Benefit analysis of reinforcing the existing networks (Option 4)

The expected CI and CML improvements based on this option is as shown in the table below. The table shows a significant improvement for CI/CML and network performance relative to the customer numbers involved and this will remove all Clachan and Aird customers from WSC classification.

Table 9: CI/CML Benefits for Option 4

Table 7: CI/CML Benefits for Option 4	CI Improvement % (Actual Volume)	CML Improvement % (Actual volume)
CLACHAN (653 036)	0.1408 (1128)	0.0715 (57280)
CLACHAN (653 037)	0.1154 (924)	0.0440 (35250)
AIRD (671 012)	0.0435 (348)	0.0076 (6049)
AIRD (671 011)	0.1531 (192)	0.1475 (18521)

There will also be the benefit of reduced losses under this option. The reduced losses based on the proposed conductor length is calculated as 111.66MWh per annum.
From the above tables, it is evident that the CI/CML improvement from the reinforcement option is significantly higher than the other proposed options. This confirms the case that Option 4 is the most preferable option as it delivers the required level of improvement to the network and will permanently remove those customers from WSC classification.

7.5 Summary of Cost

Table 10: Summary of Cost

Options	Unit	2023/24	2024/25	2025/26	2026/27	2027/28	Total
Option 1 – Do Minimum	£m	0	0	0	0	0	0
Option 2 – Enhanced Maintenance and Inspection	£m	0	0	0	0.26	0	0.26
Option 3 – Asset Replacement	£m	0	0	0	2.82	0	2.82
Option 4 – Reinforcement	£m	0	0	0	1.93	0	1.93

Option 5 – Flexible Solution	£m	0	0	0	0.45	0.45	0.90

7.6 Volume on Preferred Option

Table 11: Volume on Preferred Option

Asset Category	Unit	2023/24	2024/25	2025/26	2026/27	2027/28	Total
11kV OHL (Covered Conductor)	km	0	0	0	24	0	23
11kV Poles	#	0	0	0	318	0	318
11kV Voltage Regulator	#	0	0	0	1	0	1
11kV UG Cable (km)	Km	0	0	0	1	0	1
11kV CB (GM) Primary	#	0	0	0	1	0	1
11kV CB (PM)	#	0	0	0	4	0	4
11kV Switch (PM)	#	0	0	0	6	0	6
11kV RMU	#	0	0	0	1	0	1
11kV Pole Refurbishment	#	0	0	0	336	0	336

7.7 Unit Cost Analysis

Our RIIO ED2 Business Plan costs are derived from our outturn RIIO ED1 expenditure. We have modified costs per activity, capturing and reporting those adjustments in our cost-book. By tying our costs back to reported, outturn, real life data this approach provides multiple data points on which both the Regulator and we can benchmark cost efficiency.

It provides a high level of cost confidence in our Business Plan cost forecast for RIIO ED2. Through our benchmarking analysis, we recognised that not all Non-Load related RIIO-ED1 actual unit costs sit within the upper quartile efficiency band. Where this is the case, we have applied a catch-up efficiency to those cost categories.

Further detail on our unit cost approach, cost efficiency and cost confidence for RIIO-ED2 can be found within our ***Cost Efficiency (Annex 15.1)***. Following our draft Business Plan, we have continued to develop project volumes and costs, utilising valuable stakeholder feedback. We have included developments of our Commercial Strategy within the updated project scope and delivery strategy.

8 Validate investment plans and benefits with Stakeholders

This section of the EJP describes the stakeholder engagement strategy that has been implemented to inform SSEN's RIIO-ED2 submissions. This includes the engagement activities that have been undertaken, the stakeholder groups that have been approached, and the feedback that has been gathered from this stakeholder engagement.

The intention of this exercise was to identify the appetite from our stakeholders for SSEN in carry out the investment described within this document during RIIO-ED2 to improve the condition of SSEN's network assets and the quality of supply for customers in during ED2 and beyond.

We conducted audience research with stakeholders via online workshops/open forums to co-create our strategies and priorities in RIIO-ED2 for improving the network for WSCs. Following insights were derived:

- Stakeholders suggested that, based on the remote location of some Scottish islands, investment for the WSCs there should be a priority, as it will potentially take far longer to restore power there compared to mainland areas.
- There was no consensus on whether investment in worst-served circuits should be prioritized according to: number of WSCs; number of interruptions; level of customer vulnerability; or potential of low carbon technology (LCT) take-up.
- Stakeholders, however, expressed concern about the impact of power cuts on customers in vulnerable situations, and on this basis focusing investment efforts on reducing the number of worst-served vulnerable customers was supported.
- The interruption duration which is currently not considered in Ofgem's WSC definition is recognized as an important factor by our stakeholders.
- Stakeholders suggested that an annual WSC report would be welcome and raise the profile of the issue but might give the incorrect impression that these are the areas where there will be investment.
- Some stakeholders were concerned about the impact of worst-served circuits on generation as well as supply customers.

The lack of consensus on stakeholders on how to prioritise worst-served areas for improvement clearly suggests that being worst-served is a substantial detriment to all such customers, albeit playing out in different ways and therefore remedying these is extremely important. Therefore, we are committing to remove at least 75% of customers from this list in ED2; this ambitious proportion represents all circuits where cost benefit analysis warrants investment; the remaining 25% of WSCs are distributed over so many circuits that the benefit derived from each circuit investment would be limited to very few customers.

We will also ensure that we communicate effectively during power outages, particularly for remote communities where electricity is heavily relied upon, promote the PSR and the 105-power outage number, and produce an annual WSC report to be shared with wider stakeholders to embed resilience partnerships.

Based on the stakeholder feedback, the average Customer Minutes Lost (CML), Priority Service Register (PSR) and the vulnerability score from the Customer Mapping Tool are also factored in the scheme consideration.

9 Deliverability and Risk

Between our draft and final Business Plans we have carried out a more detailed deliverability assessment of our overall plan as a package and its component investments. Using our draft Business Plan investment and phasing as a baseline we have followed our deliverability assessment methodology. We have assessed any potential delivery constraints to our plan based on:

- In-house workforce capacity and skills constraints based on our planned recruitment and training profile and planned sourcing mix as well as the efficiencies we have built into our Business Plan (detailed in our ***Ensuring Deliverability and a Resilient Workforce (Chapter 16)*** and ***Cost Efficiency (Chapter 15)***
- Assessment of the specific lead and delivery timelines for the asset classes in our planned schemes
- We have evaluated our sourcing mix where there were known delivery constraints to assess opportunities to alleviate any constraints through outsourcing
- We have engaged our ***Supply Chain (Annex 16.2)*** to explore how the supply chain could support us to efficiently deliver greater volumes of work and how we could implement a range of alternative contracting strategies to deliver this
- We have also engaged with the supply chain on the delivery of work volumes that sit within Uncertainty Mechanisms to ensure we have plans in place to deliver this work if and when the need arises
- We have assessed the synergies between our planned load, non-load and environmental investments to most efficiently plan the scheduling of work and minimise disruption to consumers
- Based on our assessment of delivery constraints and potential solutions to resolve them, we have revised our investment phasing accordingly to ensure our Business Plan is deliverable, meets our consumers' needs and is most cost efficient for our consumers

The specific considerations for deliverability based on the scope of this EJP are detailed below:

- Scottish National Heritage and Scottish Environment Protection Agency may object to OHL circuits or elements of them and request undergrounding of sections of the OHL proposed routes or impose various conditions related to archaeological or environmental or ecological requirements to carry out the works.
- North Uist as located in the Western Isles, this can pose access and supply chain challenges for large scale projects such as this.

In order to accommodate the extension to the switchboard for the newly proposed feeder, the reinforcement option is assumes that there is sufficient space within the existing switch room. A survey will be required within the refinement stage of the project to confirm the requirements.

10 Conclusion

The purpose of this Engineering Justification Paper (EJP) has been to describe the overarching investment strategy that SSEN intends to take during RIIO ED2 for the NoSR related investment in Clachan and Aird substations.

Five investment options have been described which could be carried out as a solution to address the WSC issue at these sites. This EJP is supported by a Cost Benefit Analysis (CBA) which provides more detail on the investment option which are deemed most viable on an individual project basis.

As detailed within Section 8, a holistic approach is taken when selecting the most viable option for each investment, where the primary and secondary investment drivers are assessed together within a Cost Benefit Analysis (CBA). This includes future network trend analysis and careful consideration of the financial, safety, and environmental implications of each investment option.

- Option 1: Do Minimum
- Option 2: Enhanced Maintenance and Inspections
- Option 3: Asset Replacement
- Option 4: Asset Reinforcement
- Option 5: Flexible Solution

A thorough stakeholder engagement exercise was undertaken to gather feedback on each of these strategies to determine which approach should be proposed within SSEN's RIIO ED2 business plans.

As a result, the following costs and volumes are proposed for delivery during RIIO ED2. The preferred investment for Arisaig substation in RIIO ED2 is Option 4: asset reinforcement.

Table 12: Summary of CV Table

CV Table	Unit	2023	2024	2025	2026	2027	Total
CV15 Primary Reinforcement RIIO ED2 Spend	£m	0	0	0	1.93	0	**1.93**

11 Appendix 1 List of Indicators of Vulnerable Characteristics and Weighting System

These indicators are applied when producing combined indexes of vulnerability.

Indicator of vulnerable characteristic	Network investment priority: score (high score = more vulnerable)
Under 5 years	0.5
Under 16 years	0
Over 65 years	0.1
Over 75 years	0.4
Over 85 years	0.6
Fuel poverty levels (Scotland; 1=low, 4=v.high)	0
Fuel poor households (England)	0
Dwellings without a mains gas connection	0
Dwellings without central heating system	0
Dwellings rated in EPC bands EFG	0
Households with no car	0
Combined distances to services (Score; high=most remote)	0
Children in low income households	1
People with low qualifications	0
People in low income employment	1
Long-term unemployment	1
Disability benefits	1
Child disability benefits	1
Mental health benefits	1
Universal credit claimants	0
People in bad or very bad health	0.5
People whose health condition limits activities a lot	0.5
Access to health services (Score; 0=best access, 100=worst access)	0
People providing over 20hrs/week of care	0.5
Number of residential care homes	0
Number of care home beds	0
Households in privated rented dwellings	1
Lone parents	1
Ethnic minorities	1
Unable to speak English well or at all	0
Lone pensioners	1

12 Appendix 2: Relevant Policy, Standards, and Operational Restrictions

TG-NET-NPL-012.pdf

13 Appendix 3. Faults Data for Clachan 2017-2019

1. 2017 – 036 circuit 11kV fault: Deterioration, HV Cable box faulted, 554 Customers affected
2. 2017 – 036 circuit 11kV fault: Deterioration, broken OHL binder, 136 Customers affected
3. 2017 – 036 circuit 11kV fault: Wind and Gale, broken OHL stay caused low conductors, 403 Customers affected
4. 2017 – 036 circuit 11kV fault: Transient, PMCB Operation, 402 Customers affected
5. 2017 – 036 circuit 11kV fault: Deterioration, Faulty PMT, 187 Customers affected
6. 2018 – 036 circuit 11kV fault: Deterioration, Faulty PMT plus PMCB and CB grading issues, 644 Customers affected
7. 2018 – 036 circuit 11kV fault: Wind and Gale, Broken OHL Conductor, 558 Customers affected
8. 2018 – 036 circuit 11kV fault: Deterioration, Broken OHL Pole due to broken OHL insulator, 150 Customers affected
9. 2018 – 036 circuit 11kV fault: 3rd Party Contact, Broken OHL Jumper, 187 Customers affected
10. 2018 – 036 circuit 11kV fault: Deterioration, Broken OHL Pole due to broken OHL insulator, 150 Customers affected
11. 2018 – 036 circuit 11kV fault: Deterioration, Broken OHL Crimp causing low conductors, 149 Customers affected
12. 2019 – 036 circuit 11kV fault: Deterioration, Faulty PMT, 562 Customers affected
13. 2019 – 036 circuit 11kV fault: Lightning, Broken OHL Insulator, 410 Customers affected
14. 2019 – 036 circuit 11kV fault: Birds, Broken OHL Conductor, 187 Customers affected
15. 2019 – 036 circuit 11kV fault: Deterioration, Faulty Sure Arrestor, 138 Customers affected
16. 2017 – 037 circuit 11kV fault: Deterioration, Broken OHL Conductor, 649 Customers affected
17. 2017 – 037 circuit 11kV fault: Birds, Broken OHL Conductor, 501 Customers affected
18. 2017 – 037 circuit 11kV fault: Lightning, Faulted PMT, 342 Customers affected
19. 2017 – 037 circuit 11kV fault: Birds, Broken OHL Conductor, 498 Customers affected
20. 2017 – 037 circuit 11kV fault: Deterioration, Broken OHL Insulator caused broken pole, 342 Customers affected
21. 2017 – 037 circuit 11kV fault: Deterioration, Faulty PMT, 292 Customers affected
22. 2018 – 036 & 037 circuits 11kV fault: Testing/Commissioning Error, Primary CB 037 tripped during testing while backfeeding 036 circuit, 1060 Customers affected
23. 2018 – 037 circuit 11kV fault: Ice, Broken OHL Conductors, 344 Customers affected
24. 2018 – 037 circuit 11kV fault: Ice, Broken OHL Insulator causing burnt pole, 248 Customers affected
25. 2018 – 037 circuit 11kV fault: 3rd party Contact, Broken OHL Conductors, 231 Customers affected