Scottish & Southern Electricity Networks

RIIO-ED2 Engineering Justification Paper (EJP)

Fleet and Bramley 400/132kV Substation Group

Investment Reference No: 44/SEPD/LRE/SCO

Contents

Definitions and Abbreviations

Acronym	Definition
AIS	Air-insulated Switchgear
ASCR	Aluminium Conductor Steel Reinforced
BSP	Bulk Supply Point
CBA	Cost Benefit Analysis
CBRM	Condition Based Risk Management
CEM	Common Evaluation Methodology
CI	Customer Interruptions
CML	Customer Minutes Lost
CT	Consumer Transformation
DFES	Distribution Future Energy Scenarios
DNO	Distribution Network Operator
EJP	Engineering Justification Paper
ESA	Electricity Supply Area
EV	Electric Vehicle
FCO	First Circuit Outage
FES	Future Energy Scenarios
GIS	Geographic Information System
GM	Ground Mounted
GSP	Grid Supply Point
HI	Health Index
IDP	Investment Decision Pack
LCT	Low Carbon Technology
LEP	Local Enterprise Partnership
LI	Load Index
LRE	Load Related Expenditure
LW	Leading the Way
NPV	Net Present Value
OHL	Overhead Line
PM	Pole Mounted
PV	Photovoltaics
RSN	Relevant Section of Network
SCO	Second Circuit Outage
SSEN	Scottish and Southern Electricity Network
SP	Steady Progression
ST	System Transformation
XLPE	Cross-linked Polyethylene

1 Executive Summary

Our proposed investment at Fleet and Bramley 400/132kV substation group will deliver P2/7 compliance for an expenditure of £54.24m during RIIO-ED2.

The primary investment driver for this scheme is load-related, specifically P2 compliance at Fleet and Bramley GSP substation group. The group demand exceeds the highest band in P2/7 under all of the three Net Zero scenarios in ED2 (System Transformation, Consumer Transformation and Leading the way) based on the forecast demand growth from our Stakeholder supported Distribution Future Energy Scenario (DFES). This project is required under our accelerating progress towards net zero priority, as the Greater South East Energy Hub has developed six local energy strategies and uptake of low carbon technologies (LCT) such as electric vehicles and heat pumps has a significant impact. As the group demand is expected to exceed 1,500MW (Class F) by the end of ED2, the security requirements are significantly more onerous than the distribution requirements for FCO and SCO as defined by P2/7 Class E. Without major works, the Fleet – Bramley demand group will become P2 non-compliant.

Accelerating progress towards a net zero world

The EJP considers an exhaustive range of options to address the above issue, setting out the options that have been considered and rejected prior to the CBA analysis, and the short list of those options included within the analysis, with a clear rationale for including or excluding each option.

The Cost Benefit Analysis results shown in Table 1 demonstrate that the most cost-effective solution, that delivers the best value for consumers in terms of the 45 year Net Present Value (£k), is Option 3 which is Fleet and Bramley Split 2.

Options	Net Present Value (NPV) After 45 Years (£k)	Investment (£k)
Option 2 – Fleet and Bramley Split 1	-45,316	56,824
Option 3 – Fleet and Bramley Split 2	-42,784	54,238

Table 1 Option Summary

Following the optioneering and detailed analysis, as set out in this paper, the proposed scope of works for Option 3 is summarised in Table 2.

Asset	Volume	Costs
132kV UG Cable (Non Pressurised)	30	[redacted]
132kV CB (Gas Insulated Busbars)(ID) (GM)	28	[redacted]
Switchroom Build	2	[redacted]
Compulsory Purchase Order (Land purchase)	1	[redacted]
Agricultural compensation	1	[redacted]
Total		[redacted]

Table 2 Investment Summary

This scheme delivers the following outputs and benefits:

- Creates 255 MVA of additional capacity for the existing Fleet and Bramley substation group. With the proposed investment, the new Fleet substation will be LI2 while the new Bramley substation will be LI1 by the end of RIIO-ED2.
- Facilitates the continued uptake of low carbon technology (LCT) with the local area and help support the climate change targets of the Greater South East Energy Hub.
- Facilitates the efficient, economic, and co-ordinated development of our Distribution Network for Net Zero.

The cost to deliver the preferred solution is £54.24 million and the works are planned to be completed in 2027/28. This EJP investment sits within the Net Zero TOTEX part of our plan ask as shown in Figure 1.

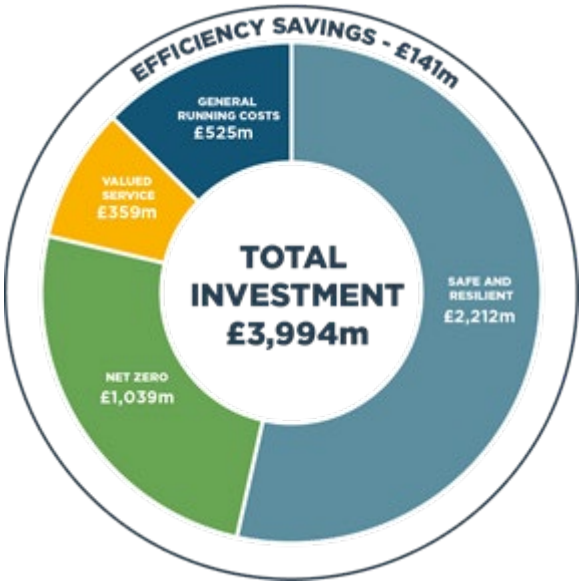

Figure 1: SSEN total investment cost within RIIO ED2

2 Investment Summary Table

Table 3 provides a high level summary of the key information relevant to this Engineering Justification Paper (EJP) and the Cost and Volume (CV) impacts within our Business Plan Data Templates.

Name of Scheme/Programme	Fleet and Bramley 400/132kV Substation Group		
Primary Investment Driver	Load related – P2 compliance		
Scheme reference/ mechanism or category	44/SEPD/LRE/SCO		
Output reference/type	132kV UG Cable (Non Pressurised) 132kV CB (Gas Insulated Busbars)(ID) (GM)		
Cost	£54.24m		
Delivery Year	2027/28		
Reporting Table	CV1: Primary Reinforcement		
Outputs in RIIO ED1 Business Plan?	No		
Spend Apportionment	**ED1**	**ED2**	**ED3+**
	-	£54.24m	-

Table 3 Investment Summary

3 Introduction

Our ***Load Related Plan Build and Strategy (Annex 10.1)***[1] sets out our methodology for assessing load-related expenditure and describes how we use the Distribution Future Energy Scenarios (DFES) 2020 as the basis for our proposals. We have established a baseline view of demand which provides a credible forward projection of load-related expenditure for the ED2 period and reflects strongly evidenced support from our stakeholders. Our ex-ante baseline funding request is based on the minimum investment required under all credible scenarios. Our plan will create smart, flexible, local energy networks that accelerate progress towards net zero – with an increased focus on collaboration and whole-systems approaches.

This investment is a component of our strategic goal of 'Accelerating progress towards a net zero world'.

Section 4 of this Engineering Justification Paper (EJP) describes our proposed load related investment plan for the reinforcement of Beaconsfield primary substation in RIIO-ED2. The primary driver considered within this paper is load-related, specifically thermal overloading triggered by the demand forecasts.

This EJP provides high-level background information for this proposed scheme, explaining the existing network arrangement, the load growth forecasts through the Distribution Future Energy Scenarios (DFES) and setting out the 'need' for this project. The Detailed Analysis section of the EJP describes the network studies undertaken, detailing the results which further justify the need of the proposed investment.

Section 5 provides a list of the credible options considered through the optioneering process to establish the most economic and efficient solution. Each option is described in detail, with the EJP setting out the justification for those options which are deemed unviable solutions, and therefore not taken forward to the Cost Benefit Analysis.

Section 6, Cost Benefit Analysis (CBA) Summary provides the comparative results of all the options considered within the CBA and sets out the rationale and justification for the preferred solution. This section also describes how we have established the cost efficiency of the plan with reference to the unit costs that have been chosen.

Section 7 explores opportunity for competition. Finally, **Section 8** of this EJP also sets out the deliverability of the plan for RIIO-ED2 and this proposed investment.

[1] ***SECTION D: (Chapter 10), Responding to the net zero Opportunity, (Annex 10.1), Load Related Plan Build and Strategy***

4 Background Information and Analysis

4.1 Existing Network Arrangements

The Fleet – Bramley GSP Group comprises Grid Supply Points Fleet and Bramley and their interconnection at 132kV to make the Fleet - Bramley Group. Fleet substation has 7 x 240 MVA 400/132kV super grid transformers (SGTs)[2]. These transformers connect to a 132kV double busbar at Fleet, which supplies thirteen 132kV circuits.

Bramley substation has 6 x 240 MVA 400/132kV SGTs which connect directly to six 132kV circuits (four of which have interconnection with Fleet GSP), as shown in Figure 2. The Bramley substation is located off Minchens Lane, Bramley, Hampshire while Fleet substation is located off Farnham Road, Farnham, Hampshire. Their geographical locations are shown in Figure 3.

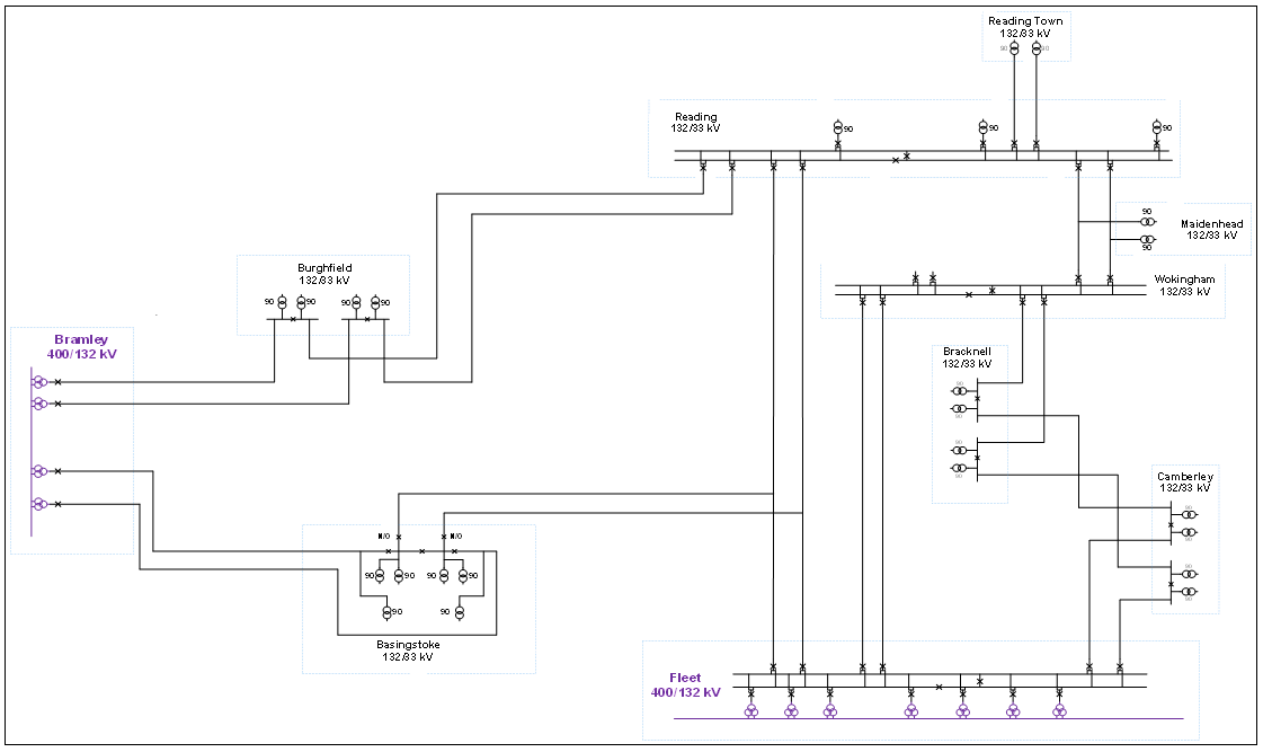

Figure 2 Fleet - Bramley Network Arrangement (single line diagram)

[2] One SGT is normally out of service.

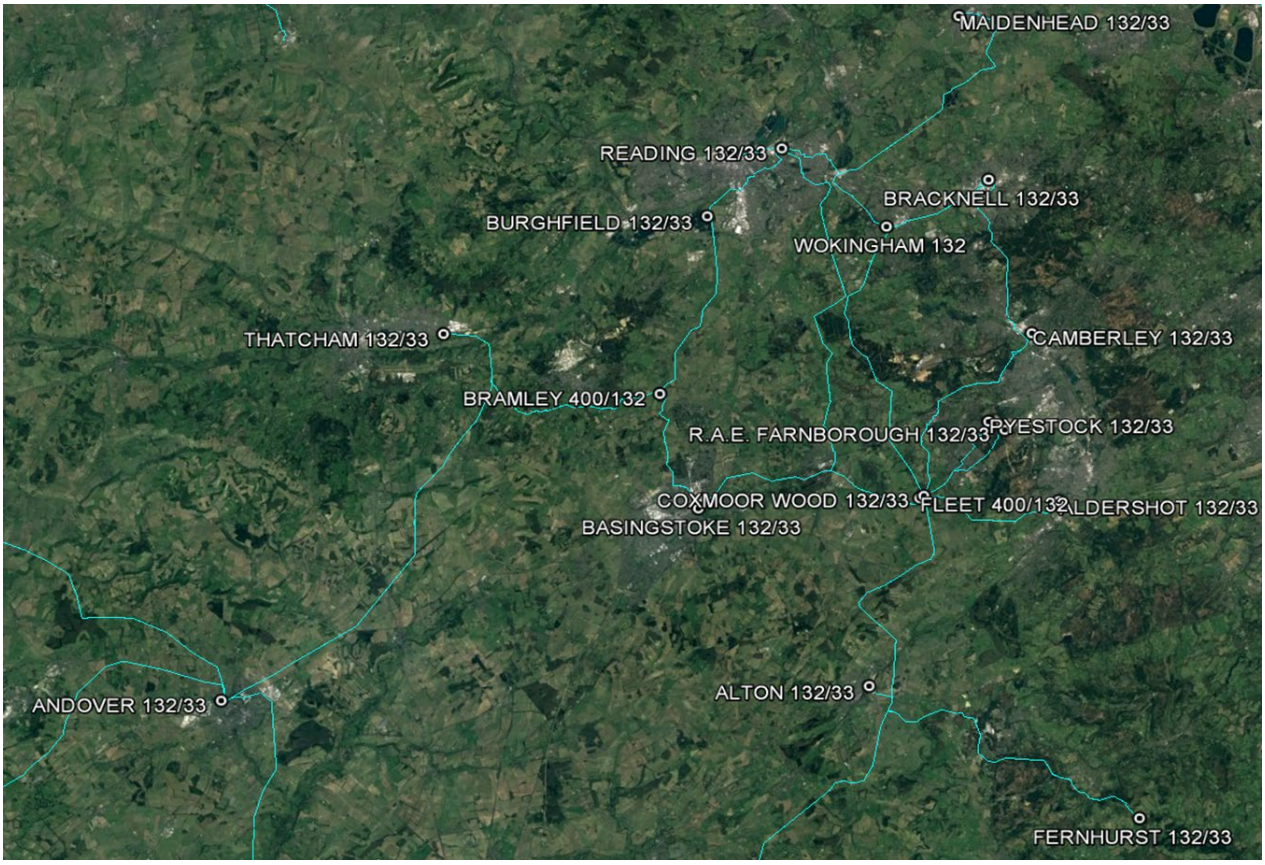

Figure 3 Fleet - Bramley Geographical Diagram.

Fleet Grid Supply Point (GSP) supplies approximately 442,000 customers and Bramley GSP supplies just over 250,000 customers. The existing arrangement divides the substations supplied by Fleet and Bramley substations into three separate GSP Groups known as Bramley (ANDO–THAT), Bramley (BASI) and Fleet–Bramley. The Fleet – Bramley GSP Group supplies 16 Bulk Supply Points (BSPs).

4.2 Local Area Energy Plan (LAEP)

All Local Authorities and Local Enterprise Partnerships (LEPs) within Fleet and Bramley GSP Group fall into the Greater South East Energy Hub. Six local energy strategies have been developed in the Energy Hub, which are underpinned by the Governments Clean Growth Strategy, the UK's Industrial Strategy and the Climate Change Act. Key themes that have emerged from the Local Energy Strategies are as follows:

1) Clean Economic Growth
2) Net zero carbon emissions by 2050 by driving growth in the low carbon and local energy sectors, ensuring local people benefit from the employment and skills development opportunities created.
3) Housing & Commercial Site Infrastructure
4) Securing a smart, modern, clean energy infrastructure which supports planned housing, industrial and commercial growth, and changing energy requirements.
5) Secure local, affordable consumption
6) Reduce energy demand and increase energy efficiency for domestic, industrial and commercial buildings and transport energy; reducing fuel poverty and improving air quality.

7) Innovation

8) Position the region as a centre for innovation in the low carbon sector, where new technologies, processes, business and finance models are demonstrated and commercialised, and policy and regulatory barriers are challenged.

9) Partnerships and Energy Networking

10) Enhance and develop working across sectors and LEP areas, capitalising on low carbon energy challenges and funding opportunities arising from the Industrial Strategy and Clean Growth Strategy.

11) Local Economic Benefits

Ensuring communities influence and benefit from projects, the local energy supply chain is developed, and businesses are able to benefit from new technologies, driving productivity.

4.3 Demand and Generation Forecast for Fleet and Bramley GSP

In order to understand the future pathways for demand and generation at Fleet Bramley GSP group, we have carried out extensive scenario studies based on the Distribution Future Energy Scenarios (DFES). The DFES, in turn, is drawn directly from National Grid's Future Energy Scenarios (FES) 2020. This framework comprises four potential pathways for the future of energy based on how much energy may be needed and from where it might come. The variables for the four scenarios are driven by government policy, economics and consumer attitudes related to the speed of decarbonisation and the level of decentralisation of the energy industry. We have worked closely with our partner Regen to develop the forecasts between 2020 and 2050 through enhanced engagement with the local authorities, local enterprise partnerships (LEPs), devolved governments, community energy groups and other stakeholders.

Based on the enhanced stakeholder engagement feedback, we have chosen Consumer Transformation as the base scenario for our investment. In order to protect consumers against uncertainty, our ex-ante baseline funding excludes load-related investment required in the last three years of the RIIO-ED2 period, except where this is required by all net zero scenarios. Full details on our DFES methodology, stakeholder input and regulatory treatments of load related investment can be found in the ***Load Related Plan Build and Strategy (Annex 10.1)***[3].

Figure 4 shows the demand projections in MVA of Fleet – Bramley GSP group for all forecast scenarios. In this case, P2 Class F limit is exceeded in ED2 under (i) System Transformation (ST) by 2027; (ii) Consumer Transformation (CT) by 2025; and (iii) Leading-the-Way (LTW) by 2024. This scenario modelling confirms the certainty of this investment in RIIO-ED2. In addition, our Connections team have recently informed us of large demand connection applications triggering this investment. While no offers have been officially accepted it is important to carry out the reinforcement to create sufficient network capacity.

If not intervened this would result in a licence condition breach, hindering LCT deployment and potentially a wide-spread blackout in the areas supplied by Fleet – Bramley GSP.

[3] ***Load Related Plan Build and Strategy (Annex 10.1)***

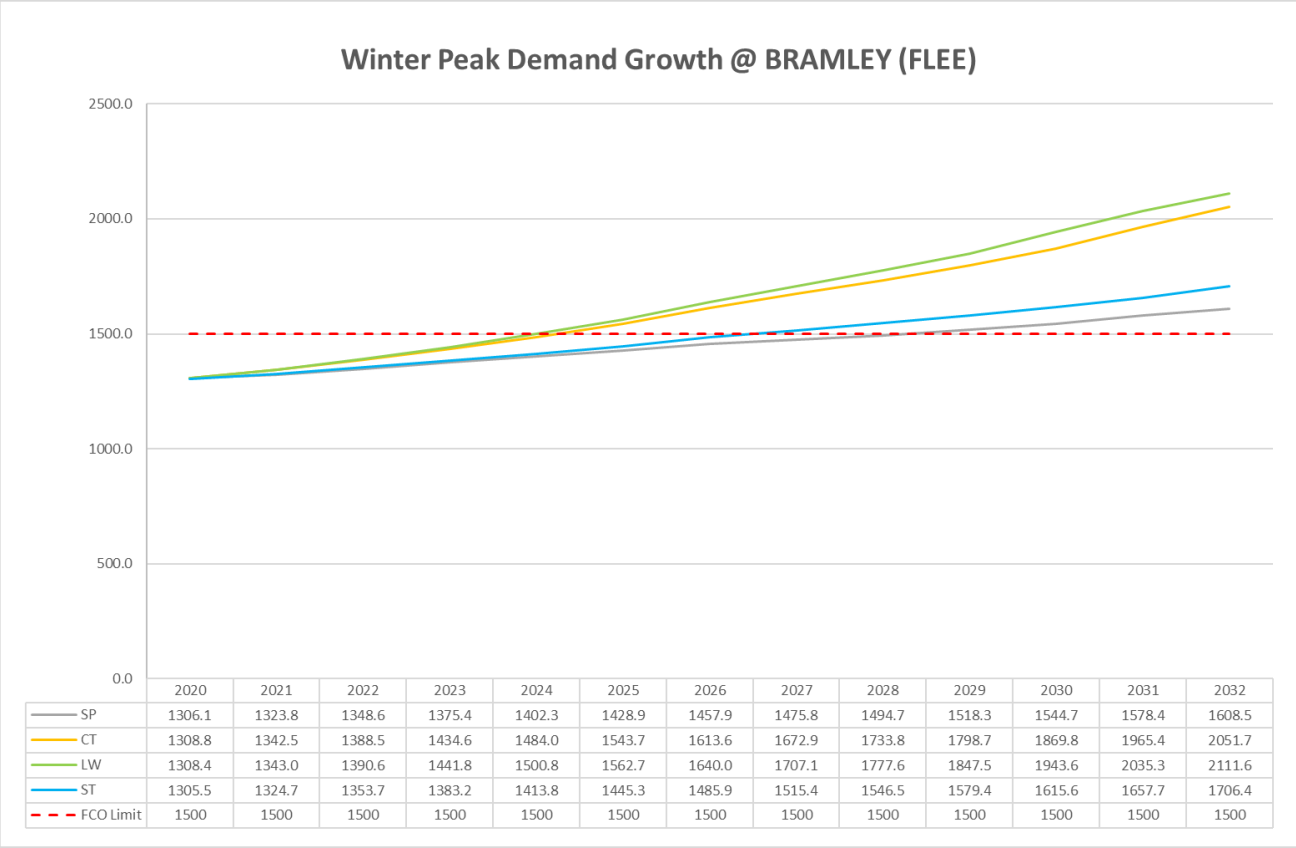

	2020	2021	2022	2023	2024	2025	2026	2027	2028	2029	2030	2031	2032
SP	1306.1	1323.8	1348.6	1375.4	1402.3	1428.9	1457.9	1475.8	1494.7	1518.3	1544.7	1578.4	1608.5
CT	1308.8	1342.5	1388.5	1434.6	1484.0	1543.7	1613.6	1672.9	1733.8	1798.7	1869.8	1965.4	2051.7
LW	1308.4	1343.0	1390.6	1441.8	1500.8	1562.7	1640.0	1707.1	1777.6	1847.5	1943.6	2035.3	2111.6
ST	1305.5	1324.7	1353.7	1383.2	1413.8	1445.3	1485.9	1515.4	1546.5	1579.4	1615.6	1657.7	1706.4
FCO Limit	1500	1500	1500	1500	1500	1500	1500	1500	1500	1500	1500	1500	1500

Figure 4: Fleet – Bramley GSP winter peak demand growth.

Peak demand is expected to increase at Fleet – Bramley GSP by approximately 364 MVA from 2020/21 (2020 in Figure 4) to 2027/28 (2027 in Figure 4) when following the CT scenario. The projected primary demand of 1673 MVA (Winter Peak) is split below by demand type. Figure 5 shows the largest impact on demand in the area is from multiple new battery (storage) connection application at Fleet/Bramley, followed by EVs and heat pumps, equating to 12%, 9% and 7% of the overall projected demand respectively.

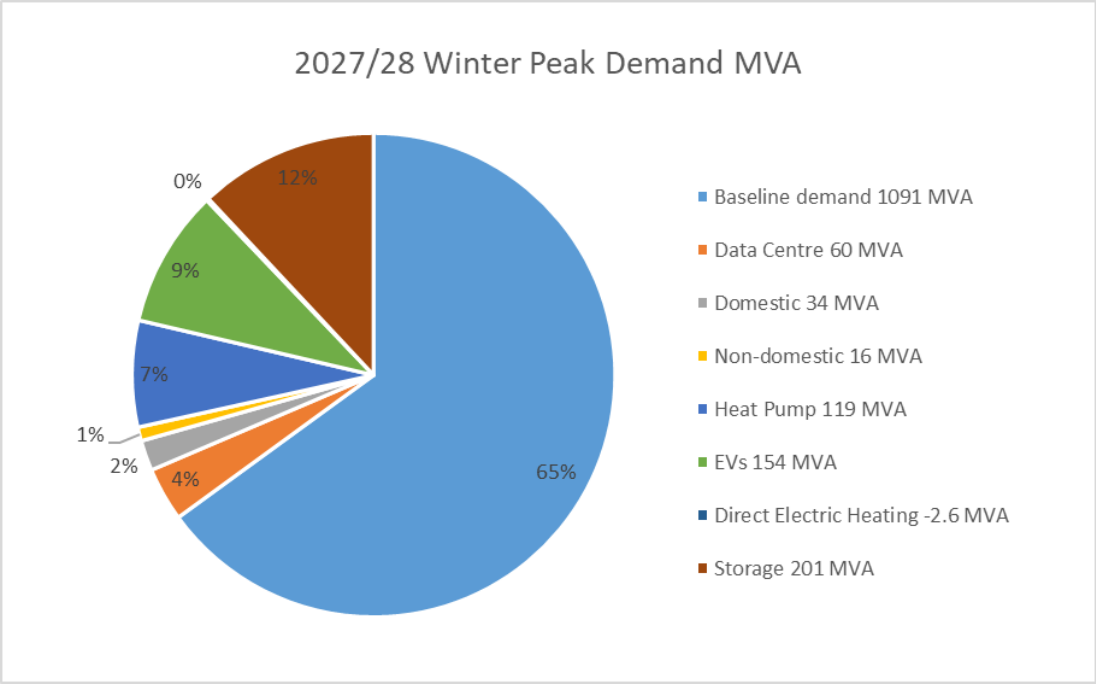

Figure 5 Fleet – Bramley GSP Winter peak demand split by 2027/28-CT scenario

4.4 Existing Asset Condition

All the SGTs at Fleet and Bramley substations are owned by National Grid, there is presently no plan to replace any SGTs within ED2 period.

All 132kV feeder circuit breakers at Fleet substations are owned by SSEN, which will be HI1 by the end of ED2.

4.5 Thermal Flow Analysis

Thermal flow analysis has been carried out using peak demand in 2027/28 under CT scenario. Appendix 2 shows that Fleet – Bramley GSP Group is not overloaded in any seasons under both first circuit outage (FCO) and second circuit outage (SCO) conditions if the demand group remains in Class E under Engineering Recommendation P2/7 – Security of Supply. However, as discussed in Section 4.3 the Fleet – Bramley demand group is exceeding 1,500MW by the end of ED2 which will move this group into Class F. As a result, National Electricity Transmission System Security and Quality of Supply Standards (NETS SQSS) will also need to be considered. These are more onerous than the distribution requirement for FCO and SCO as defined by P2/7, i.e. N-4 plus, where the Fleet – Bramley demand group will become non-compliant.

This EJP explores options to address this compliance constraint, including the prospect of transmission-level reinforcement to meet the NETS SQSS, as well as an alternative option to reinforce the Fleet – Bramley GSP Group to ensure it does not move to Class F of P2/7, meaning NETS SQSS is not applicable and the group would remain P2/7 compliant.

4.6 Voltage Level Assessment

Appendix 2 shows that voltage level reinforcement is not required as voltage compliance is achieved.

4.7 Fault Level Assessment

Appendix 2 shows that fault level reinforcement is not required as fault level compliance is met.

4.8 Network Analysis Summary

The analysis above has shown that intervention to reinforce Fleet and Bramley 400/132kV Substation Group will be required within RIIO-ED2, and that the derogation from the P2/7 engineering standard is not appropriate. The DFES forecast increase in demand and, in turn, the increased reliance on the network, will impact a larger number of customers, and more severely, considering the forecast uptake of low carbon technology.

5 Summary of Options Considered

This section of the report sets out the investment options that have been considered to resolve the anticipated overload issues at Fleet and Bramley GSP substation group. A holistic approach has been taken to ensure that the alternative investment options considered long-term value-for-money for network customers.

5.1 Whole System Considerations

Additionally, we have considered the potential for using Whole Systems solutions, involving collaboration with third parties, to address this network need. We set out our assessment in Appendix 3. This follows our standard approach for embedding Whole System considerations into our load and non-load investment decisions, in line with Ofgem's ED2 business plan guidance. This is described in our ***Whole Systems Strategy (Annex 12.1)***.

Our assessment enables us to take a proportionate consideration of Whole System options, based on the feasibility of such options existing and materiality of the costs involved.

Option 5 considered in this EJP is a Whole Systems option, involving collaboration with National Grid Electricity Transmission (ET) to deliver reinforcement works to install a new GSP. This would keep all existing GSPs under Class E (P2/7) and would, therefore, meet the security standard requirements. However, works to finalise design, feasibility and overall costs are still under investigation therefore this option is not taken forward to CBA at the time of Final Business Plan preparation. Work on the feasibility and economics of this potential solution will continue and will generate a full Whole System CBA in early 2022.

5.2 Summary of Options

Table 4 provides a high-level summary of the four investment options under consideration along with the advantages and disadvantages associated with each option. A more detailed description of each option is provided within the following sub-sections.

Option	Description	Advantages	Disadvantages	Result
1. Do Minimum	Compliance continues to be managed in the short-term by carrying out demand transfer from the overloaded demand group to another.	Minimum cost and workload; Small impact to existing network; Short delivery time.	Does not increase network capacity, further reinforcement is still likely to be required.	Reject

Option	Description	Advantages	Disadvantages	Result
2. Fleet and Bramley Split 1	Split Fleet and Bramley GSP group by installing a new 14-panel 132kV switchboard at Bramley 400/132kV GSP; two additional 132kV circuits between Bramley and Wokingham tapped into existing 132kV OHL.	Increase network resilience. Shorter outage time; Long term benefit.	Additional land purchase maybe required; Can incur large civil costs; Requires new control strategy.	Taken forward to CBA
3. Fleet and Bramley Split 2	Split Fleet and Bramley GSP group by installing a new 12-panel 132kV switchboard at Bramley 400/132kV GSP; a new 12-panel 132kV switchboard at Burghfield and two additional 132kV circuits between Bramley and Burghfield.	Increase network resilience; Shorter outage time; Long term benefit.	Additional land purchase maybe required; Could incur large civil costs Requires new control strategy.	Taken forward to CBA (Preferred Option)
4. Flexibility Solution	Flexible service contracts to reduce peak demand and defer capital investment.	Relatively low cost Defers need for network reinforcement	Amount of flexibility depends on location-specific resources and interests. CAPEX may still be required.	Reject
5. Whole systems Option	Install a new GSP to reduce demand at Fleet and Bramley substation group.	Allow latest and most efficient technology to be installed. Increase network resilience;	Likely to be high cost and also long lead time to execute constructed solution – which may not support active major connection requests	Under investigation Not taken forward to CBA at this stage

Table 4 Summary of Load Related Investment Options

5.3 Detailed Option Analysis

5.3.1 Option 1: Do-Minimum

Estimated Cost: N/A

There is currently no 132kV interconnection between Fleet – Bramley GSP group and other GSP(s) therefore it is not suggested to not carry out load transfer as this will not satisfy the large demand growth and new connection applications.

As this option does not resolve the non-compliance issue identified in Section 4.5 and would result in poorer guaranteed standard performance and customer interruptions, it is rejected.

5.3.2 Option 2: Fleet and Bramley Split 1

Estimated Cost: £56,824k.

The main concept for this proposal is to increase the transfer capability into Reading and also into Wokingham. These two substations are both points where multiple circuits converge and therefore these will be the most effective places to reinforce when considering 132 kV restrictions in Fleet/Bramley. It is proposed to further utilise the existing Reading – Fleet/Basingstoke 132 kV circuit. The lower half which runs near to Wokingham will be utilised by connecting it into the Wokingham 132 kV buses. The upper section which connects into Reading will be utilised by connecting it into Reading. Normal open points will be established to effectively split this circuit into a Bramley – Reading circuit (in the top half) and a Fleet – Wokingham (tee Basingstoke) circuit using the lower half. Briefly, the scheme will require a new 14-panel 132kV switchboard installed at Bramley 400/132kV GSP; installation of a new 4.5 km dual 132 kV circuit between the Wokingham 132 kV bus and 132kV Tower FBR61 on this 132 kV circuit. The upper half requires the installation of a new 17 km 132 kV dual circuit between Bramley and 132kV Tower FBR63 on this 132 kV circuit. The revised network arrangement (single line diagram) is shown in Figure 6.

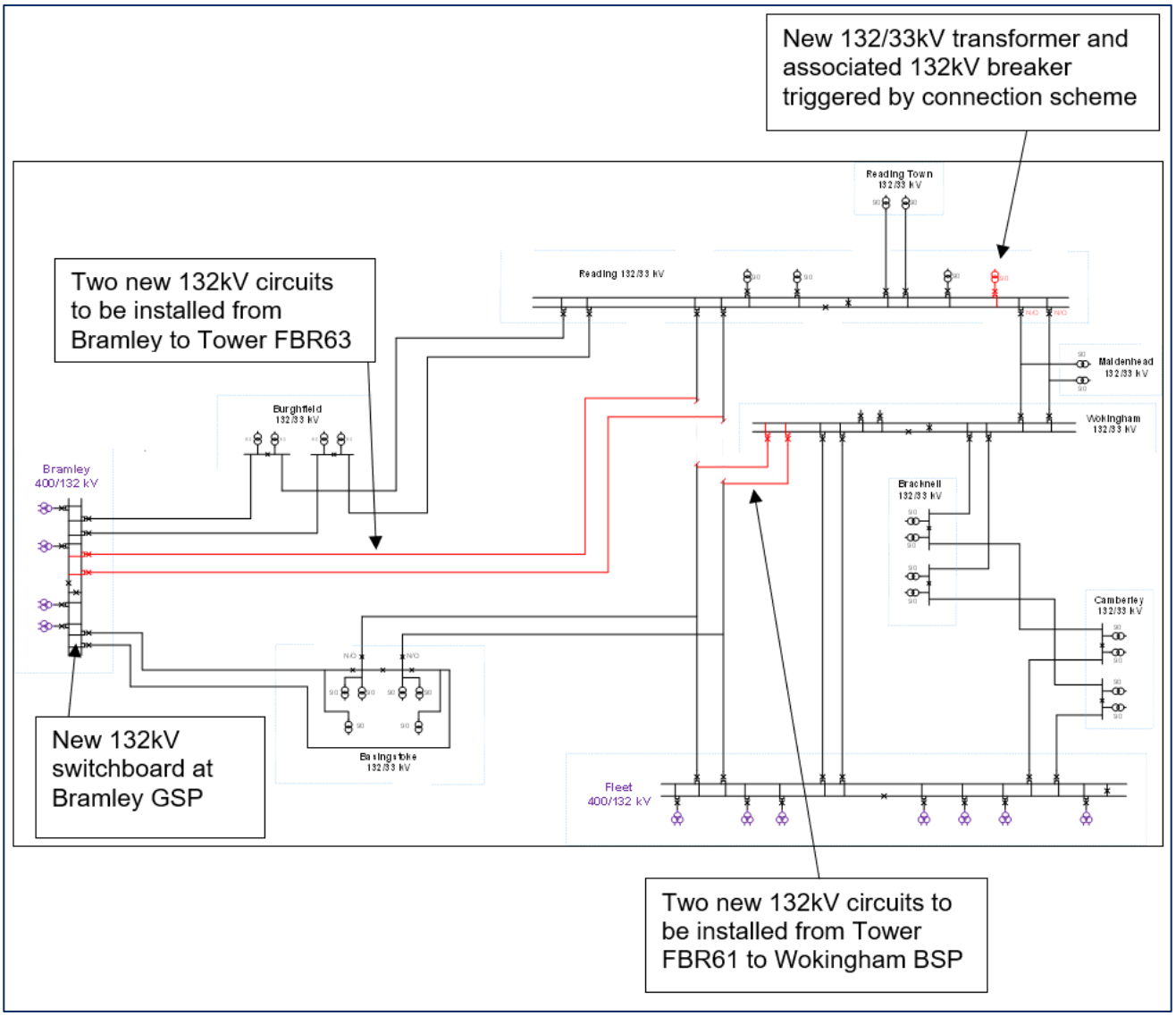

Figure 6 Proposed New Fleet - Bramley Network Arrangement for Option 2 (single line diagram)

Details of reinforcement are listed below:

At Bramley GSP:

- Purchase the necessary land to accommodate all new equipment.
- Construct a 132kV switch house to accommodate the new switchboard (spare for 20 bays).
- Install an indoor 14-panel 132kV 40/100kA break/make double-busbar switchboard with:
  - 4 x 400/132kV transformer incomer panels (National Grid)
  - 6 x feeder circuits
  - 2 x bus coupler
  - 2 x bus section
- Terminate the two Bramley – Basingstoke SGTs into this switchboard.
- Terminate the two Bramley – Burghfield SGTs into this switchboard.

- Terminate the six outgoing 132kV circuits into this switchboard.

Install two new 132kV underground circuits from Bramley to Tower FBR63.

- Approximate (route) length 17km of dual 132kV cable:
  - The minimum summer rating is 247MVA continuous and maximum winter rating is 271MVA – proposal is to install 1,000mm2 Cu CAS.
  - The proposed route estimated length is 17km (proposed route shown in Figure 6 below in pink);
  - Standard protection for this cable circuit is to be included, including fibre.

Install two new 132kV underground circuits from Wokingham BSP to Tower FBR61.

- Approximate (route) length 17km of dual 132kV cable:
  - The minimum summer rating is 247MVA continuous and maximum winter rating is 271MVA – proposal is to install 1,000mm2 Cu CAS.
  - The proposed route estimated length is 17km (proposed route shown in Figure 7 below in orange);
  - Standard protection for this cable circuit is to be included, including fibre.

Works required at Reading BSP has already included under connection triggered reinforcement scheme which is detailed in ***429_SEPD_CONNS_NETWORK_RAIL***.

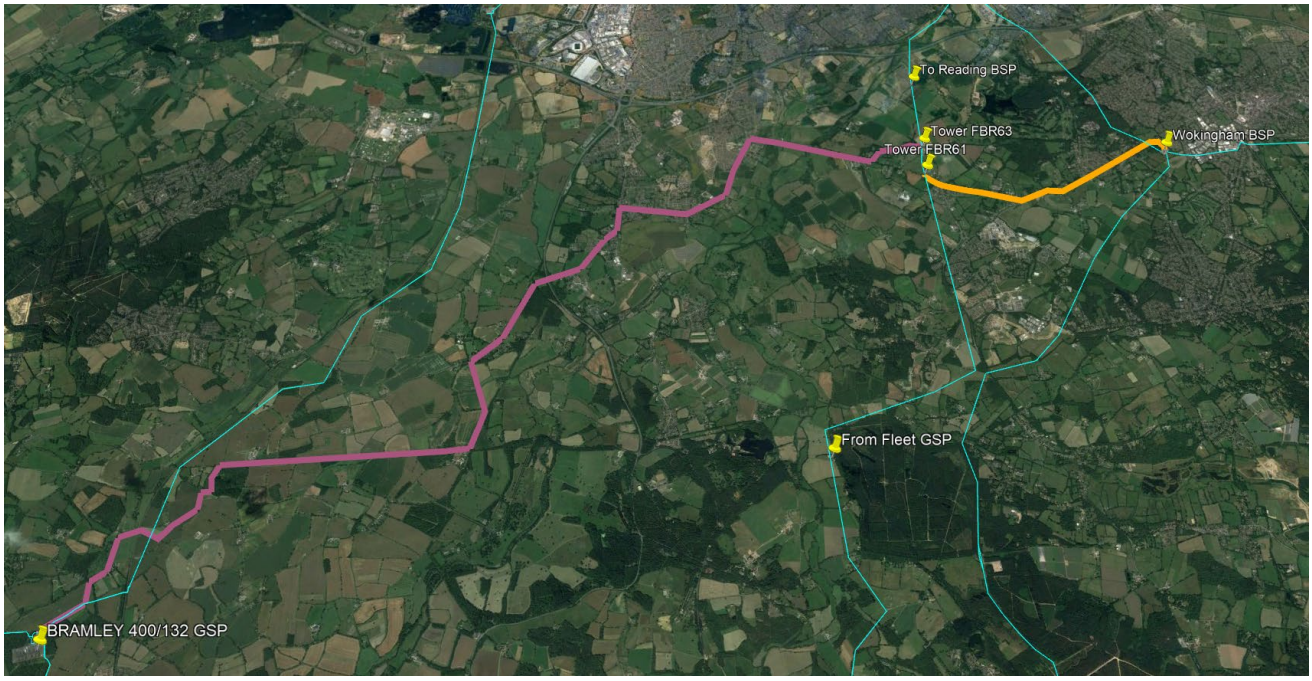

Figure 7 Proposed new 132kV cable route from Bramley GSP and Wokingham BSP to existing 132kV OHL.

5.3.3 Option 3: Fleet and Bramley Split 2

Estimated Cost: £54,238k.

Briefly, the scheme will require a new 14-panel 132kV switchboard installed at Bramley 400/132kV GSP; a new 14-panel 132kV switchboard to be installed at Burghfield and two additional 132kV circuits installed between Bramley and Burghfield. The revised network arrangement (single line diagram) is shown in Figure 8.

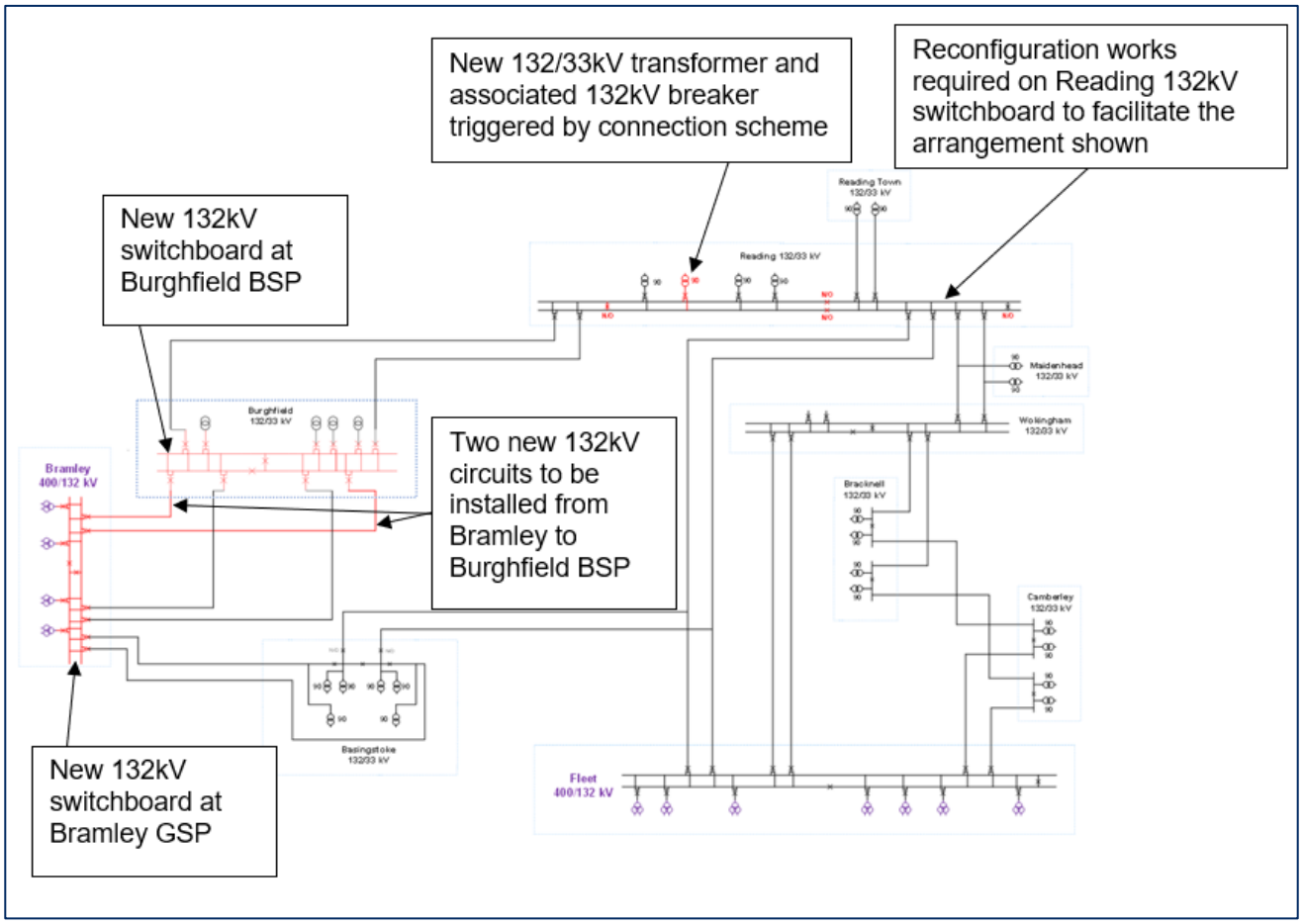

Figure 8 Proposed New Fleet - Bramley Network Arrangement for Option 3 (single line diagram)

Details of reinforcement are listed below:

At Bramley GSP:

- Purchase the necessary land to accommodate all new equipment.
- Construct a 132kV switch house to accommodate the new switchboard (spare for 20 bays).
- Install an indoor 14-panel 132kV 40/100kA break/make double-busbar switchboard with:
  - 4 x 400/132kV transformer incomer panels (National Grid)
  - 6 x feeder circuits
  - 2 x bus coupler
  - 2 x bus section
- Terminate the two Bramley – Basingstoke SGTs into this switchboard.
- Terminate the two Bramley – Burghfield SGTs into this switchboard.
- Terminate the six outgoing 132kV circuits into this switchboard.

At Burghfield BSP:

- Purchase the necessary land to accommodate all new equipment.
- Construct a 132kV switch house to accommodate the new switchboard (spare for 20 bays)

- Install an indoor 14-panel 132kV 40/100kA break/make double-busbar switchboard with:
  - 4 x 132/33kV transformer incomer panels
  - 6 x feeder circuits (4 existing, 2 new)
  - 2 x bus coupler
  - 2 x bus section
- Terminate the four existing 132/33kV transformers into this switchboard.
- Terminate the six outgoing circuits into this switchboard.

Install two new 132kV underground circuits from Bramley to Burghfield.

- Approximate (route) length 18km of dual 132kV cable:
  - The minimum summer rating is 247MVA continuous and maximum winter rating is 271MVA – proposal is to install 1,000mm2 Cu CAS.
  - The proposed route estimated length is 18km (proposed route shown in Figure 9 below);
  - Standard protection for this cable circuit is to be included, including fibre.

Works required at Reading BSP has already included under connection triggered reinforcement scheme which is detailed in ***429_SEPD_CONNS_NETWORK_RAIL***.

Figure 9 Proposed new 132kV cable route from Bramley GSP to Burghfield BSP.

5.3.4 Option 4: Flexible Solution

Despite our commitment to the Flexibility First approach, in this scenario the current assessment has concluded that the size and certainty of the demand growth could not be met through a flexible solution within comparable costs or with the required confidence. Flexibility will only be pursued where the economic benefit of deferring the capital investment exceeds the additional cost of the flexibility service, providing an optimised net present value to consumers, or potentially delivering additional whole system benefits.

However, flexibility may provide OPEX benefits to our customers during scheme delivery by;

a) avoiding/reducing the risk of outages during planned works through load/generation management

b) avoiding/reducing the need for Mobile Diesel Generation in planned or unplanned outage scenarios

These opportunities will be reviewed, and flexibility secured should the CEM Framework CBA prove a positive benefit, with justification of the decisions/reviews presented as required.

Further detail of our Flexibility First approach and assessment methodology can be found our ***DSO Strategy (Annex 11.1), Appendix F, Delivering value through Flexibility***.

5.3.5 Option 5: Whole Systems Solution

Estimated Cost: N/A.

In the past we have investigated the requirements associated with securing the Fleet – Bramley demand group in accordance with transmission standards. It was found that a feasible option would be to create a new GSP to reduce demand on the existing Fleet and Bramley group. We continue to work with National Grid Electricity Transmission to explore the detailed Whole System solution and associated cost. A full CBA may be undertaken for this option in due course.

6 Cost Benefit Analysis (CBA)

This section provides an overview of the results from the CBA. This detailed exercise has been undertaken to support the investment strategies discussed within this EJP.

6.1 CBA of investment options

Ofgem's RIIO-ED2 standard CBA template was used to assess costs and benefits of the conventional options for each circuit individually. Capital reinforcement costs, CI/CML penalties, network losses and other societal benefits are the key parameters used in the CBAs of the three options progressed. The customer interruptions (CI) and customer minutes lost (CML) have been calculated based on the potential overload and the probability of a failure[4].

6.2 CBA Results

The CBA results in Table 5 show the most cost-effective solution to be option 3 'Fleet and Bramley Split 2', as it has the most favourable (least negative) NPV against the required investment. The investment increases network resilience at Fleet and Bramley GSP within RIIO-ED2, while providing efficient and enduring long-term security of supply as we move towards a Net Zero network. Therefore, based on the CBA results Option 3 is the preferred solution to address the P2/7 compliance issue. The summary of costs is presented in Table 6.

Cost Benefit Analysis comparisons

Options	Net Present Value (NPV) After 45 Years (£k)	Investment (£k)
Option 2 – Fleet and Bramley Split 1	-45,316	56,824
Option 3 – Fleet and Bramley Split 2	-42,784	54,238

Table 5 Cost Benefit Analysis comparisons

Summary of Cost

Options	Unit	2024	2025	2026	2027	2028	ED3+	Total £k
Option 2 – Fleet and Bramley Split 1	**£m**	0	0	0	0	56.8	0	56.8
Option 3 – Fleet and Bramley Split 2	**£m**	0	0	0	0	54.24	0	54.24

Table 6 Summary of cost

6.3 Options Summary

Option 1 represents the lowest capital investment cost and so initially may appear to be the most favourably option. However, this option is unable to fully resolve the P2/7 compliance issue. Furthermore, it would result in poorer guaranteed standard performance and customer interruptions. Hence option 1 is not considered as a cost effective, long term enduring solution.

[4] Further information on our CBA approach is set out within our ***Cost Benefit Analysis Process (Annex 15.8)***

Option 2 and 3 satisfy P2/7 requirements therefore provide the required security of supply at Fleet and Bramley GSP group.

Option 3 is the preferred option due to its favourable NPV.

Option 4 is not suitable as a flexible solution is unlikely to provide sufficient capacity, given the size and certainty of projected load growth in the group.

Option 5 is a potential Whole Systems solution which is still being explored with National Grid Electricity Transmission. Full cost and scope are not yet confirmed and so this option is not formally considered at this stage.

6.4 Costing Approach

Our ED2 Business Plan costs are derived from our outturn RIIO ED1 expenditure. We have modified costs per activity, capturing and reporting those adjustments in our cost-book. By tying our costs back to reported, outturn, real life data this approach provides multiple data points on which both the Regulator and we can benchmark cost efficiency.

It provides a high level of cost confidence in our Business Plan cost forecast for RIIO ED2. Through our benchmarking analysis, we recognise that not all RIIO-ED1 actual unit costs sit within the upper quartile efficiency band. Where this is the case, we have applied a catch-up efficiency to those cost categories.

Further detail on our unit cost approach, cost efficiency and cost confidence for RIIO-ED2 can be found within our ***(Cost Efficiency Annex 15.1)***[5]. Following our draft Business Plan, we have continued to develop project scopes and costs, utilising valuable stakeholder feedback. We have included developments of our Commercial Strategy within the updated project scope and delivery strategy.

Unlike asset replacement, large load projects will include more unique and site-specific costs for example civils, waterway, road or rail crossings and local planning considerations. Through detailed bottom-up project assessment, we have identified projects that are impacted by Regional and Site factors driving additional costs.

[5] Link to ***Cost Efficiency (Annex 15.1)***.

7 Opportunity for Competition

Ofgem's Business Plan Guidance (BPG) for 'early competition'[6] requires us to identify in our Business Plan projects which are estimated to be valued above the £50m threshold value, and, for these projects to:

(i) consider the probability of alternative solutions (contestability test); and
(ii) where we believe that early competition would not be in the interests of consumers, provide reasons.

In its RIIO-2 Sector-Specific Methodology Core Document[7], Ofgem provides further details on how this requirement might be met. Further details of our approach to competition in ED2 can be found in ***Competition (Chapter 18)*** of our Final Business Plan.

The RIIO-2 Sector-Specific Methodology Core Document sets out a number of key criteria that should be considered when assessing the suitability of an investment for early competition. These are summarised as follows.

- Contestability of solution (are there different potential solutions to the problem)?
- Certainty of need
- Complexity
- Criticality (e.g. time)

In the context of Fleet-Bramley – and the *need*, and alternative solutions, set-out in this EJP – consideration of each of these key criteria for competition is summarised in Table 7.

From our initial assessment, our view is Fleet-Bramley is not suitable for early competition on the basis of the key competition criteria.

[6] RIIO-ED2 Business Plan Guidance, 22 April 2021, Page 53 (5.51-5.53) www.ofgem.gov.uk/sites/default/files/docs/2021/04/riio-ed2_business_plan_guidance_-_april_2021.pdf

[7] RIIO-2 Sector-Specific Methodology Core Document, 24 May 2019, Page 94 (10.117-10.121) RIIO-2 Sector Specific Methodology – Core document (ofgem.gov.uk)

Criteria	Justification	Evidence
Contestability of solutions	The availability of an economic alternative solution is limited at present.	The only credible alternative, non-distribution network, solution we have identified at this stage is a Whole System transmission (NGET) solution. This option would be based on the installation of a new Grid Supply Point (GSP) which would reduce the group demand at Fleet and Bramley. Whilst this option would have the advantage of increasing network resilience and would allow installation of new assets, it is likely to represent a comparatively high-cost solution (*to be confirmed*). We are actively engaging with National Grid Transmission Operator at the time of preparation of our Final Business Plan as part of our documenting ***Whole System strategy*** and process[8]. A flexible solution isn't feasible from either an economic or technical perspective as already explored in section 3.3.4. The existing security of supply concerns combined with the addition of new major connections reduce the opportunity and increase the risks associated with pursuing flexible solutions in place of conventional investment. While we have considered flexibility, the forecasted exceedance of thermal ratings of the existing assets would require significant and sustained provisions of flexibility across the group in all four of our DFES scenarios within ED2, as such we're confident this option cannot be taken forward and this has been evidenced throughout this document.
Certainty of system need	The certainty of need to do something on the system is **high**	As described in Section 4 of this EJP, the first circuit outage (FCO) P2/7 limit is exceeded in the ED2 period under all three net zero compliance DFES scenarios. This scenario modelling confirms the certainty of need in RIIO-ED2. Also, a number of major connection offers have recently been made which will trigger the need for this Fleet-Bramley reinforcement scheme. The most recent is for a 20MVA data centre in Bracknell. As the required capacity can be provided at 11kV, this means that the connecting customer would not be required (under the 'two voltage level' rule) to pay directly for the Fleet-Bramley 132kV reinforcement through connection contribution. Instead, this reinforcement form part of our proposed ED2 baseline funding – supported by this EJP.
Complexity	The complexity of both the 'need', and of the identified potential solutions, is **high**. This may limit the opportunity for competition.	The requirement for this work is based on ensuring appropriate levels of security of supply across the Fleet-Bramley network. The options considered to date are highly complex and specialised 132kV work at several major substations across our network. The newly installed assets are embedded within the existing network and will become an intrinsic part of the operation of the network and assets at Burghfield and Reading BSPs and Bramley GSP. The proposed assets are an integral part of the part of our network and would not, therefore, be easily separable, for the purpose of early competition.

8 ***Whole Systems (Annex 12.1)***

Criteria	Justification	Evidence
Criticality of need	The criticality of need to do something on the system is **high**	'Do-nothing' is not a credible option as this would see non-compliance with P2 (and the associated licence condition) in the ED2 period under all credible forward demand scenarios. We are unable to fulfil our connection offer without undertaking this work. Because of the 'two voltage level' rule, it is highly likely that, even if the specific connection application in play does not progress to final execution, other connectees are highly likely to emerge given the comparatively low customer contribution under these circumstances.

Table 7 - Summary of key criteria assessment for competition at Fleet-Bramley

Recommendation

Due to need to act quickly due to major connection applications, complexity and high probability of we propose that pursuing an early competition solution for the Fleet-Bramley scheme is not in the interests of customers and stakeholders. We commit to continuing to explore the Whole System solution with NGC TO and to keep this under continual review. This continues to follow our published Whole System process and will include a full Whole System CBA once completed[9].

[9] A preliminary Whole Systems CBA for Fleet-Bramley is provided in **44/SEPD/LRE/SCO/CBA**. This CBA will be developed and refined as the discussion with NGT (TO) continues.

8 Deliverability and Risk

Between our Draft and Final Business Plans we have carried out a more detailed deliverability assessment of our overall plan as a package and its component investments. Using our draft Business Plan investment and phasing as a baseline we have followed our deliverability assessment methodology. We have assessed any potential delivery constraints to our plan based on:

- In-house workforce capacity and skills constraints based on our planned recruitment and training profile and planned sourcing mix as well as the efficiencies we have built into our Business Plan ***(detailed in our Workforce Resilience Strategy in (Annex 16.3)*** and ***Cost Efficiency (Annex 15.1)***
- Assessment of the specific lead and delivery timelines for the asset classes in our planned schemes
- We have evaluated our sourcing mix where there were known delivery constraints to assess opportunities to alleviate any constraints through outsourcing
- We have engaged our ***Supply Chain Strategy (Annex 16.2)*** to explore how the supply chain could support us to efficiently deliver greater volumes of work and how we could implement a range of alternative contracting strategies to deliver this
- We have also engaged with the supply chain on the delivery of work volumes that sit within Uncertainty Mechanisms to ensure we have plans in place to deliver this work if and when the need arises
- Specific to load schemes: We have carried out flexibility assessments at all voltage levels in order to understand when we can defer reinforcement through paying for flexibility services, therefore ensuring our investment profile is deliverable and at the lowest cost to consumer[10]
- We have assessed the synergies between our planned load, non-load and environmental investments to most efficiently plan the scheduling of work and minimise disruption to consumers
- Based on our assessment of delivery constraints and potential solutions to resolve them, we have revised our investment phasing accordingly to ensure our Business Plan is deliverable, meets our consumers' needs and is most cost efficient for our consumers

Table 8 sets out the revised investment phasing based on the outcome of our deliverability assessment:

	2023/24	2024 /25	2025/26	2026/27	2027/28
Revised Investment Phasing					x

Table 8 Revised investment phasing

The specific considerations for deliverability based on the scope of this EJP are detailed below:

- Medium risk on cable installation – the proposed new 132kV cable route from Bramley GSP to Burghfield BSP has a mixture of main roads and rural roads. Final route will need to be revised at design stage.

- Medium risk on works at Bramley GSP – Bramley GSP is owned by National Grid therefore all works at Bramley substation will be carried out by National Grid. We will need to coordinate with National Grid to ensure their work can fit into our project schedule.

[10] See ***Flexibility within Load Related Plan Build and Strategy (Annex 10.1***)

- Medium risk on works at Burghfield BSP – additional land may be required to house the new 132kV GIS indoor switchboard before decommissioning existing 132kV outdoor switchboard. Temporary backup supply may also be required.

9 Conclusion

This EJP has raised the need for load related investment on Fleet and Bramley GSP group reinforcements within the ED2 price control period. This need for investment is driven by the compliance with P2/7, given the significant forecast demand increase and the potential for significant impact on both existing and new customers. Reinforcement is required in ED2 to address this anticipated non-compliance issue.

Five investment options have been considered. The preferred solution involves splitting Fleet and Bramley GSP by installing a new 14-panel 132kV switchboard at Bramley 400/132kV GSP; installing a new 14-panel 132kV switchboard at Burghfield and two additional 132kV circuits to be installed between Bramley and Burghfield in 2027/28.

The proposed ED2 investment has a combined scheme total estimated cost of £54.24m. It is proposed that all reinforcement is carried out in the 2027/28 financial year to minimise the risk of thermal overload and network non-compliance.

Appendix 1. Relevant Policy, Standards, and Operational Restrictions

The policies, manuals and standards and operational restrictions relevant to the content of this paper.

Policy Number	Policy Name / Description
TG-NET-OHL-010	Load Ratings of Overhead Lines – Data Sheet
TG-NET-OHL-012	Short Circuit Ratings of Overhead Lines – Data Sheet
TG-NET-OHL-104	Electrical Constants for Overhead Lines- Data Sheet
sTG-NET-CAB-009	Load Ratings of LV to 33kV Underground Cables – Design Data
TG-NET-CAB-010	Electrical Constants for LV to 33 kV Underground Cables- Data Sheet
TG-NET-CAB-011	Short Circuit Ratings of 6.6kV to 33kV Underground Cables - Design Data

Table 9 Relevant documents

Appendix 2. Network Assessments

Thermal assessment

Demand Group	Season	Group Class	Contingency	Loaded Circuit / Transformer	FCO Demand to be Met	FCO Available Capacity
Burghfield BSP	Winter	D	Fault on Bramley to Burghfield Circuit 1	Bramley to Burghfield Circuit 2	162 MVA	**271 MVA**
Reading & Reading Town, Camberley, Bracknell, Wokingham & Maidenhead BSP	Winter	E	Fault on Fleet to Reading Circuit 1	Fleet to Reading Circuit 2 Fleet to Wokingham Circuit 1 & 2 Fleet to Camberley 1 & 2	705 MVA	**1237 MVA**

Table 10 FCO assessment for Fleet-Bramley

Demand Group	Season	Group Class	Contingency 1st outage	Contingency 2nd outage	Loaded Circuit / Transformer	SCO Demand to be Met	SCO Available Capacity
Burghfield BSP	Spring/ Autumn	D	Fault on Bramley to Burghfield Circuit 1	Fault on Bramley to Burghfield Circuit 2	Backfeed from Reading BSP via 2 no. 132kV Circuit	146 MVA	**396 MVA**
Camberley, Bracknell, Wokingham & Maidenhead BSP	Spring/ Autumn	E	Fault on Fleet to Camberley Circuit 1	Fault on Fleet to Camberley Circuit 2	Backfeed from Fleet to Wokingham 132kV Circuit	349 MVA	**454 MVA**

Table 11 SCO assessment for Fleet-Bramley

Voltage level assessment

SYSTEM VOLTAGE LEVELS FLEET GSP						
Season	**GSP voltage**	**Demand**	**Generation**	**Study Scenario**	**Highest/ Lowest Voltage**	**Busbar Name**
[-]	[p.u.]	[MVA]	[MVA]	[-]	[p.u.]	[-]
Winter maximum	1.0316	471 MVA	0	Intact	1.0087	BRKN-A1
Winter maximum	1.0258	471 MVA	0	Fault on Fleet to Camberley Circuit 1	0.9879	BRKN-A1
The Voltage levels are in the limit of ± 10% on 132kV. ± 6% on 33kV under intact condition.						

Table 12 Voltage level assessment for Fleet-Bramley

Fault level assessment

Bus Number	Bus Name	Nominal Voltage	Pre-fault Voltage	X/R ratio	Ik''-Initial Sym.	Ik"-Angle	Ip-Peak Make	RMS Sym. Break	Angle Sym. Break	DC Component	RMS Asym. Break	Circuit Breaker Break Rating	Circuit Breaker Make Rating	Circuit Breaker Fault Level Index
					(0ms)	(0ms)	(10ms)	(50ms)	(50ms)	(50ms)	(50ms)	(Minimum CB rating at substation)	(Minimum CB rating at substation)	(Minimum CB rating at substation)
		(kV)	(pu)		(kA)	(degrees)	(kA)	(kA)	(degrees)	(kA)	(kA)	(kA)	(kA)	(kA)
12410	BRLE-A1	132.0	1.057	24.0	23.38	-87.49	62.65	23.24	-88.27	21.40	31.59	N/A	N/A	-
12411	BRLE-A2	132.0	1.057	24.0	23.38	-87.49	62.65	23.24	-88.27	21.40	31.59	N/A	N/A	-
12630	BURG-M1	33.0	1.027	20.4	14.92	-87.17	39.62	14.32	-87.79	12.14	18.77	25.0	62.5	FLI1
86647	BURG-R	33.0	1.034	17.0	13.61	-86.67	35.74	13.35	-87.28	10.23	16.82	25.0	62.5	FLI1
12631	BURG-M2	33.0	1.027	20.4	14.92	-87.17	39.62	14.32	-87.79	12.14	18.77	25.0	62.5	FLI1
12611	BURG-A2	132.0	1.059	8.0	16.28	-83.07	39.34	16.16	-83.64	4.47	16.76	40.0	100.0	FLI1
12612	BURG-A3	132.0	1.059	8.0	16.28	-83.07	39.34	16.16	-83.64	4.47	16.76	40.0	100.0	FLI1
12610	BURG-A1	132.0	1.059	8.0	16.28	-83.07	39.34	16.16	-83.64	4.47	16.76	40.0	100.0	FLI1
12613	BURG-A4	132.0	1.059	8.0	16.28	-83.07	39.34	16.16	-83.64	4.47	16.76	40.0	100.0	FLI1
101	New BURG - READ 1	132.0	1.061	11.6	16.07	-85.06	40.62	16.05	-85.71	7.25	17.61	N/A	N/A	-
201	New BURG - READ 2	132.0	1.061	11.6	16.07	-85.06	40.62	16.05	-85.71	7.24	17.61	N/A	N/A	-
21911	READ-AR1	132.0	1.062	11.0	15.23	-84.79	38.27	15.16	-85.43	6.41	16.46	40.0	100.0	FLI1
11216	BASI-A3	132.0	1.055	16.4	18.67	-86.46	48.78	18.44	-87.23	12.71	22.39	40.0	100.0	FLI1
11210	BASI-A1	132.0	1.055	16.4	18.67	-86.46	48.78	18.44	-87.23	12.71	22.39	40.0	100.0	FLI1
11212	BASI-A2	132.0	1.055	16.4	18.67	-86.46	48.78	18.44	-87.23	12.71	22.39	40.0	100.0	FLI1
11217	BASI-A4	132.0	1.055	16.4	18.67	-86.46	48.78	18.44	-87.23	12.71	22.39	40.0	100.0	FLI1
11218	BASI-A1T	132.0	1.055	16.4	18.67	-86.46	48.78	18.44	-87.23	12.71	22.39	40.0	100.0	FLI1
11219	BASI-A2T	132.0	1.055	16.4	18.67	-86.46	48.78	18.44	-87.23	12.71	22.39	40.0	100.0	FLI1
11232	BASI-CM2	33.0	1.033	16.6	15.39	-86.49	40.24	14.68	-87.31	10.96	18.32	17.5	44.6	FLI4
11230	BASI-CM1	33.0	1.033	16.6	15.39	-86.49	40.24	14.68	-87.31	10.96	18.32	17.5	44.6	FLI4
11231	BASI-CR1	33.0	1.032	15.0	16.15	-86.09	42.08	14.94	-87.67	12.72	19.62	17.5	44.6	FLI4
11233	BASI-CM3	33.0	1.034	21.8	12.59	-87.31	33.67	11.99	-88.44	11.78	16.81	17.5	44.6	FLI1
21931	READ-CM2	33.0	1.031	23.0	13.05	-87.50	34.82	12.75	-87.77	10.69	16.63	20.0	50.0	FLI1
21930	READ-CM1	33.0	1.031	17.3	14.05	-86.63	36.97	13.25	-87.65	11.30	17.42	20.0	50.0	FLI1

Bus Number	Bus Name	Nominal Voltage	Pre-fault Voltage	X/R ratio	Ik''-Initial Sym.	Ik"-Angle	Ip-Peak Make	RMS Sym. Break	Angle Sym. Break	DC Component	RMS Asym. Break	Circuit Breaker Break Rating	Circuit Breaker Make Rating	Circuit Breaker Fault Level Index
					(0ms)	(0ms)	(10ms)	(50ms)	(50ms)	(50ms)	(50ms)	(Minimum CB rating at substation)	(Minimum CB rating at substation)	(Minimum CB rating at substation)
		(kV)	(pu)		(kA)	(degrees)	(kA)	(kA)	(degrees)	(kA)	(kA)	(kA)	(kA)	(kA)
12410	BRLE-A1	132.0	1.057	23.7	23.74	-87.46	63.55	24.06	-87.99	21.54	32.29	N/A	N/A	-
12411	BRLE-A2	132.0	1.057	23.7	23.74	-87.46	63.55	24.06	-87.99	21.54	32.29	N/A	N/A	-
12630	BURG-M1	33.0	1.027	20.6	14.97	-87.19	39.77	14.43	-87.81	12.26	18.94	25.0	62.5	FLI1
86647	BURG-R	33.0	1.034	17.1	13.66	-86.70	35.89	13.46	-87.29	10.34	16.97	25.0	62.5	FLI1
12631	BURG-M2	33.0	1.027	20.6	14.97	-87.19	39.77	14.43	-87.81	12.26	18.94	25.0	62.5	FLI1
12611	BURG-A2	132.0	1.059	8.1	16.66	-83.13	40.31	17.04	-83.49	4.66	17.66	40.0	100.0	FLI1
12612	BURG-A3	132.0	1.059	8.1	16.66	-83.13	40.31	17.04	-83.49	4.66	17.66	40.0	100.0	FLI1
12610	BURG-A1	132.0	1.059	8.1	16.66	-83.13	40.31	17.04	-83.49	4.66	17.66	40.0	100.0	FLI1
12613	BURG-A4	132.0	1.059	8.1	16.66	-83.13	40.31	17.04	-83.49	4.66	17.66	40.0	100.0	FLI1
101	New BURG - READ 1	132.0	1.061	11.5	16.24	-85.02	41.00	16.43	-85.45	7.23	17.95	N/A	N/A	-
201	New BURG - READ 2	132.0	1.061	11.5	16.24	-85.02	40.99	16.42	-85.45	7.23	17.95	N/A	N/A	-
21911	READ-AR1	132.0	1.062	10.9	15.38	-84.75	38.60	15.49	-85.18	6.40	16.76	40.0	100.0	FLI1
11216	BASI-A3	132.0	1.055	16.2	18.89	-86.42	49.29	18.92	-86.98	12.73	22.80	40.0	100.0	FLI1
11210	BASI-A1	132.0	1.055	16.2	18.89	-86.42	49.29	18.92	-86.98	12.73	22.80	40.0	100.0	FLI1
11212	BASI-A2	132.0	1.055	16.2	18.89	-86.42	49.29	18.92	-86.98	12.73	22.80	40.0	100.0	FLI1
11217	BASI-A4	132.0	1.055	16.2	18.89	-86.42	49.29	18.92	-86.98	12.73	22.80	40.0	100.0	FLI1
11218	BASI-A1T	132.0	1.055	16.2	18.89	-86.42	49.29	18.92	-86.98	12.73	22.80	40.0	100.0	FLI1
11219	BASI-A2T	132.0	1.055	16.2	18.89	-86.42	49.29	18.92	-86.98	12.73	22.80	40.0	100.0	FLI1
11232	BASI-CM2	33.0	1.033	16.6	15.41	-86.49	40.30	14.73	-87.27	10.96	18.36	17.5	44.6	FLI4
11230	BASI-CM1	33.0	1.033	16.6	15.41	-86.49	40.30	14.73	-87.27	10.96	18.36	17.5	44.6	FLI4
11231	BASI-CR1	33.0	1.032	15.0	16.17	-86.09	42.14	14.99	-87.64	12.72	19.66	17.5	44.6	FLI4
11233	BASI-CM3	33.0	1.034	21.8	12.61	-87.31	33.71	12.03	-88.41	11.79	16.84	17.5	44.6	FLI1
21931	READ-CM2	33.0	1.031	22.9	13.08	-87.50	34.88	12.80	-87.74	10.69	16.68	20.0	50.0	FLI1
21930	READ-CM1	33.0	1.031	17.3	14.07	-86.63	37.03	13.31	-87.61	11.31	17.47	20.0	50.0	FLI1

Table 13 Fault level assessment for Fleet-Bramley

Appendix 3: Whole Systems consideration

In augmenting our decision-making processes to consider Whole System solutions, we have introduced an assessment to identify where a Whole Systems CBA would be a useful decision-making tool for ED2 load and non-load schemes. While our work with the ENA to undertake Whole Systems CBAs is ongoing, we have introduced the 'Whole Systems CBA test' to identify where a scheme may be suitable for a Whole Systems CBA to be conducted. Where a Whole Systems CBA is determined to be a useful decision-making tool, these would be conducted in addition to the standard Ofgem CBA and/or SSEN's flexibility CBA. We have introduced this test in line with Ofgem's expectations for "proportionality when submitting a Whole System CBA. For example, smaller or simple projects following the standard CBA template, whereas larger or more complex projects requiring bespoke analytical approaches" (Ofgem BPG, section 4.28, p.34).

The 'Whole Systems CBA test' involves assessing each investment scheme of over £2m (the threshold to develop an EJP for load and non-load investments) against 5 tests. These 5 tests help determine whether a Whole Systems CBA is a useful decision-making tool based on the characteristics of the scheme, including whether it will have wider cross sector or societal impacts.

Details on each of the tests are provided in case study 6 in ***Whole System (Annex 15).*** Tests 1-3 are aligned with the ENA's guidance for Whole System CBA tests. We have added Tests 4 and 5 to clarify whether a Whole Systems CBA is required based on the materiality / proportionality of the investment (Test 4) and whether a flexibility CBA only is sufficient (Test 5). Table 14 below outlines our Whole Systems CBA test for Fleet Bramley GSP.

Scheme	Test 1: Are there Whole Systems interactions, or is there potential for it?	Test 2: Could a Whole Systems CBA drive you to make a different decision?	Test 3: Is a Whole Systems CBA reasonable?	Test 4 - Is the project valued at over £2m?	Test 5 - Is the investment plan related to procuring flexible solutions only?
Fleet Bramley GSP	Yes – There is an opportunity to collaborate with National Grid on two of the options: 1) to deliver reinforcement works that bring the Fleet/Bramley GSP group up to Class F transmission security of supply standards 2) Construct 4 new 400/132kV transformer incomer panels (owned by National Grid) at the Bramley GSP site.	Yes. The use of a Whole Systems CBA with input from multiple parties could plausibly lead to a different investment decision being made, as it would capture the range of costs and benefits accruing to different parties.	Yes – SSEN has been working closely with National Grid to consider reinforcement approaches for the Fleet Bramley GSP group.	Yes	No

Table 14 Whole Systems CBA test for Fleet Bramley GSP

As the result of tests 1, 2 and 3 above is “Yes”, a Whole Systems CBA may be a useful decision-making tool. Additionally, as the investment relates to investment other than procuring flexibility, there may be benefit in conducting the Whole System CBA in addition to the standard CBA. Therefore, this investment programme has been confirmed as requiring a Whole System CBA which is now underway and due for completion in 2022.